SACHS es una
marca de ZF

Válido a partir de 11.2017

# Amortiguadores para vehículos

## de líneas liviana, pick-up y utilitarios

SACHS

# Guía de Catálogo

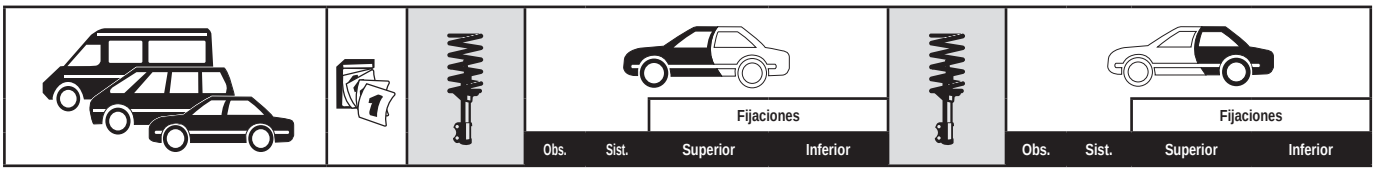


| ALFA ROMEO | | | | | | | | | | | |
|---|---|---|---|---|---|---|---|---|---|---|---|
| 145/146 TD-JTD y Nafta | 94-> | **E2335G 312 050** | | MP | E | Br | **2032G 316 036** | | T | GM10/38 | GM12/35 |
| 147 | 01-> | **E2353G 314 906** | | MP | E | Bri | **E2042G 556 307** | | MP | E | Br |
| 155 1.9TD-1.8 y 2.0 Nafta | 94-> | **E2335G 312 050** | | MP | E | Br | **2032G 316 036** | | T | GM10/38 | GM12/35 |
| 156 2.0-JTD-V6 - 2.5V6 24V | 09/97-> | **E2353G 314 906** | | MP | E | Bri | **E2042G 556 307** | | MP | E | Br |
| Mito | 09-> | **313 925 313 926** | Izq. Der. | MP | E | Br | **313 962** | | T | E | GM12/52 |

**Sistema Estructural**

**C:** Cápsula
**MP:** Estructura McPherson
**T:** Tubular

**Código**

**Prefijo E:** Pieza de Origen Importado.

**Subfijo G:** Pieza con presurización de Gas.

## Símbolos y abreviaturas

| | |
|---|---|
| ● | Lleva adaptador |
| ▮▮ | Dos por rueda |
| ▲ | En desarollo |
| ▼ | Discontinuado (consultar disponibilidad) |

**Sistema de amortiguador**

| | |
|---|---|
| **C** | Cápsula |
| **MP** | Estructura McPherson |
| **T** | Tubular |

**Tipos de fijaciones**

| | |
|---|---|
| **Br** | Bracket (anclaje) |
| **Bri** | Brida |
| **E** | Espiga |
| **Esp** | Fijación especial |
| **G** | Buje de Goma |
| **GM** | Buje de goma-metal |
| **H** | Horquilla |
| **P** | Placa |
| **R** | Rótula |
| **T** | Traba (moño) |
| **X** | Extremo de dirección |

# Información General

Los productos indicados en este catálogo solo los puede instalar el personal calificado de un taller mecánico.

Indique en sus pedidos siempre la referencia completa.

Por favor en caso de duda indique también la designación de tipo y el año de construcción del vehículo para el que está destinado el artículo deseado.

Si precisa información adicional, por favor contáctese con nuestro Departamento de Atención al Cliente.

Quedan reservados todos los derechos.
Queda prohibida la reproducción o el uso de este catálogo (también de forma parcial) para la elaboración de un catálogo propio sin consentimiento previo.

Los números de las piezas de recambio del fabricante sólo se usan para compararlos. No está permitido el empleo de este tipo de dato en las facturas emitidas al propietario del vehículo.

Todos los suministros quedan sujetos a nuestras condiciones generales de entrega y pago.
www.zf.com/services/documents

No se aceptarán reclamos en base a los datos que aparecen en el presente catálogo. Reservado el derecho a introducir modificaciones sin previo aviso.

# Índice

Sistema de Fijaciones 4

**Línea Liviana**

Alfa Romeo / Asia / Audi / BMW 5

Chery / Chrysler / 7

Citroën / Dacia / Daewoo 8

Dodge / Fiat / 9

Ford 10

GMC (Chevrolet) 13

Honda 14

Hyundai / Isuzu 15

Jeep / Kia / Land Rover / Mazda 16

Mercedes Benz 17

Mitsubishi / Nissan 18

Peugeot 19

Rastrojero 20

Renault 21

Rover 22

Saab / Seat / SsangYong / Subaru / 23

Suzuki /Toyota 24

Volkswagen 25

Volvo 26

**Referencias Cruzadas** 28

**Tabla de dimensiones** 43

**Instrucciones de Montaje** 58

# *Sistema de Fijaciones*

**E** **E: Espiga**

**T** **T: Traba**

**Datos:**
**T11/64 = T¨A¨/¨B¨**

**Br** **Br: Bracket**

**Bri** **Bri: Brida**

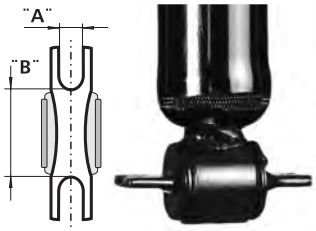

**H** **H: Horquilla**

**P** **P: Placa**

**G** **G: Goma**

**Datos:**
**G16/37 = G¨A¨/ ¨B¨**

**Gm** **Gm: Goma Metal**

**Datos:**
**G16/37 = G¨A¨/ ¨B¨**

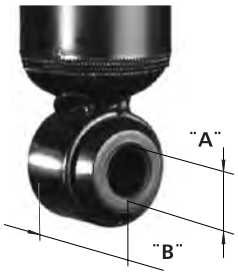


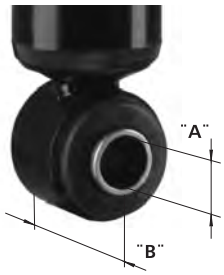


## Tipos de Anclajes:

Dentro del catálogo de aplicaciones Ud. encontrará una columna destinada a identificar los distintos sistemas de fijación que posee cada amortiguador. Las letras identifican el tipo de anclaje (ejemplo GM: Goma-Metal), en algunos casos las mismas van acompañadas de números, los dos primeros dígitos indican el diámetro interior (”A”) y los dos últimos la longitud (”B”), Ejemplo: G16/37: Anclaje tipo G, diámetro int. 16mm. y longitud 37 mm.

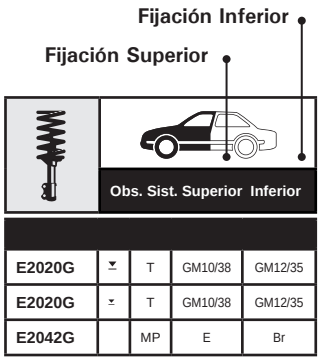

| | | | | | | | | | | | |
|---|---|---|---|---|---|---|---|---|---|---|---|
| | | | | | Fijaciones | | | | | Fijaciones | |
| | | | Obs. | Sist. | Superior | Inferior | | Obs. | Sist. | Superior | Inferior |
| **ALFA ROMEO** | | | | | | | | | | | |
| 145/146 TD-JTD y Nafta | 94-> | **E2335G 312 050** | | MP | E | Br | **2032G 316 036** | | T | GM10/38 | GM12/35 |
| 147 | 01-> | **E2353G 314 906** | | MP | E | Bri | **E2042G 556 307** | | MP | E | Br |
| 155 1.9TD-1.8 y 2.0 Nafta | 94-> | **E2335G 312 050** | | MP | E | Br | **2032G 316 036** | | T | GM10/38 | GM12/35 |
| 156 2.0-JTD-V6 - 2.5V6 24V | 09/97-> | **E2353G 314 906** | | MP | E | Bri | **E2042G 556 307** | | MP | E | Br |
| Mito | 09-> | **313 925 313 926** | Izq. Der. | MP | E | Br | **313 962** | | T | E | GM12/52 |
| **ASIA** | | | | | | | | | | | |
| Topic (Furgon / Minibus) | 93-> | **8075/3** | ▼ | T | E | T9/71 | **8002 316 227** | | T | G16/37 | G16/37 |
| **AUDI** | | | | | | | | | | | |
| A1 1.2 - 1.4 TFSI / Sportback | 11-> | **314 717** | | MP | E | Bri | **280 565** | | T | E | GM10/45 |
| A3 1.8 - 1.8T - 1.9TDI | 95-04/03 | **1353G 316 028** | | MP | E | Bri | **1064G 316 015** | | T | E | GM10/45 |
| A3 / A3 Sportback | 05/03-> | **E1035G 312 267** | | MP | E | Bri | **E1034G 311 007** | | T | E | GM14/37 |
| A4 (8D2/B5) | 95-01 | **1345G 316 027** | | MP | E | H | **E1070G 170 815** | | T | E | GM10/80 |
| A4 (8D2/B5) espiga corta | 95-01 | **-** | | | | | **E1014G 280 560** | | T | E | GM10/80 |
| A4 (8D2/B5) Quattro | 95-11/00 | **1345G 316 027** | | MP | E | H | **E1072G 170 817** | | T | GM12/58 | GM12/60 |
| A4 (8E2/B6) | 01-12/04 | **E1041G 558 301** | | MP | E | H | **E1022G 312 783** | | T | E | GM15/55 |
| A4 (8EC) | 12/04-11/07 | **E1027G 311 017** | | MP | E | H | **E1036G 313 367** | | T | E | GM15/55 |
| A4 (8K2/8K5) | 12/07-> | **313 364** | | MP | E | Bri | **313 366** | | T | E | GM14/37 |
| A5 / A5 Sportback (8T3/8TA) | 07/08-> | **313 364** | | MP | E | Bri | **313 366** | | T | E | GM14/37 |
| A6 / Avant (4B/C5) | 97-05 | **1345G 316 027** | | MP | E | H | **1068G 316 016** | | T | E | GM10/60 |
| A6 / Avant (4B/C5) plato liso | 97-05 | **E1017G 557 837** | | MP | E | H | **1068G 316 016** | | T | E | GM10/60 |
| A6 (4B/C5) Quattro | 97-05 | **1345G 316 027** | | MP | E | H | **E1078G 556 281** | | T | E | GM12/60 |
| A6 / Avant (4F) | 05-> | **E1061G 312 638** | | MP | E | H | **E1066G 312 640** | | T | E | GM15/69 |
| Q3 Quattro | 10/12-> | **315 091** | | MP | E | Bri | **313 253** | | T | E | GM14/37 |
| Q5 Quattro | 09-> | **313 364** | | MP | E | Bri | **314 213** | | T | E | GM14/37 |
| Q7 Quattro | 06-> | **314 455 314 456** | | MP | E | Br | **314 457** | | T | E | GM12/50 |
| TT 1.8 - 2.0 - 3.2 V6 Quattro | 07-> | **312 643** | | MP | E | Bri | **313 370** | | T | E | GM14/37 |
| **BMW** | | | | | | | | | | | |
| Mini Cooper One / S / D | 02-07 | **E14029G 290 236 E14031G 290 237** | Izq. Der. | MP | E | Bri | **E14034G** | ▼ | T | E | GM |

| | | | | | Fijaciones | | | | | Fijaciones | |
|---|---|---|---|---|---|---|---|---|---|---|---|
| | | | Obs. | Sist. | Superior | Inferior | | Obs. | Sist. | Superior | Inferior |
| **BMW** | | | | | | | | | | | |
| Mini Cooper / Mini Clubman S / D | 07-> | **E14029G 290 236 E14031G 290 237** | Izq. Der. | MP | E | Bri | **313 740 313 741** | | T | E | GM15/63 |
| Serie 1 (E87) 116i-118i-118d-120i-120d-130i | 06-10/13 | **E14021G 310 982 E14023G 310 983** | Izq. Der. | MP | E | Bri | **E14028G 310 984** | | T | E | E |
| Serie 1 (F20) 116i-118i-125i-125d | 11/13-> | **315 869** | | MP | E | Bri | **315 872** | | | E | GM13/64 |
| Serie 3 (E21) 315-316-318-320-320USA | 75-82 | **E8405 100 274** | | C | E | - | **E8336 101 532** | | T | E | GM10/45 |
| Serie 3 (E30) 316i-318i-320i-323i-324d-325i (mangueta 51 mm) | 82-90 | **E8403 100 456** | | C | E | - | **E14010G 105 750** | | T | E | GM12/40 |
| Serie 3 (E30) 316i-318i-320i-324d (mangueta 45 mm) | 82-01/92 | **E8401G 100 457** | | C | E | - | **E14010G 105 750** | | T | E | GM12/40 |
| Serie 3 (E36) 316-318-320-323-325-328 Sedan y Coupe | 05/92-04/99 | **E14305G 115 372 E14307G 115 373** | Izq. Der. | MP | E | Br | **E14018G 556 882** | | T | E | GM12/43 |
| Serie 3 (E36) 323 Ti Compact | 97-08/00 | **E14317G 312 069 E14319G 312 070** | Izq. Der. | MP | E | Br | **E14010G 105 750** | | T | E | GM12/40 |
| Serie 3 (E36) Cabrio / Touring 320i-323i-325i-328i | 94-04/99 | **E14305G 115 372 E14307G 115 373** | Izq. Der. | MP | E | Br | **E14018G 556 882** | | T | E | GM12/43 |
| Serie 3 (E36) Compact 316-318-318Ti-318Tds | 94-08/00 | **E14305G 115 372 E14307G 115 373** | Izq. Der. | MP | E | Br | **E14002G 170 823** | | T | E | GM12/43 |
| Serie 3 (E36) M3 Coupe 3.0-3.2 | 94-99 | **E14007G 312 253 E14005G 312 252** | Izq. Der. | MP | E | Br | **E14024G 290 816** | ⊻ | T | E | GM12/43 |
| Serie 3 (E46) 316-318-320-323-325-328-330d Sedan y Coupe | 05/99-05 | **E14001G 556 867 E14003G 556 868** | Izq. Der. | MP | E | Bri | **E14018G 556 882** | | T | E | GM12/43 |
| Serie 3 (E46) M3 Coupe 3.2 | 00-> | **E14017G 310 051 E14019G 310 052** | Izq. Der. | MP | E | Br | **E14030G** | ⊻ | T | E | GM13/43 |
| Serie 3 (E90) 316i-318i-320i/d-323i-325i-330i/d-335i | 05-> | **E14037G 311 403 E14039G 311 404** | Izq. Der. | MP | E | Bri | **E14028G 310 984** | | T | E | E |
| Serie 3 (E92) Coupe 320i-320d-330i | 06->13 | **E14037G 311 403 E14039G 311 404** | Izq. Der. | MP | E | Bri | **E14028G 310 984** | | T | E | E |
| Serie 3 (F30) 320i-325i-330i/d | 13-> | **315 869** | | MP | E | Bri | **315 872** | | | E | GM13/64 |
| Serie 5 (E28) 518i-520i-524td-525i-525e | 82-86 | **E14327G** | ⊻ | C | E | - | **E14008G 105 731** | ⊻ | T | E | GM15/65 |
| Serie 5 (E34) 518i-520i (Ø carter 45,3 mm) | 88-90 | **E14041G 312 255** | | C | E | - | **E14026G** | ⊻ | T | E | GM14/65 |

| | | | | | | | | | | | |
|---|---|---|---|---|---|---|---|---|---|---|---|
| | | | Fijaciones | | | | | Fijaciones | | | |
| | | | Obs. | Sist. | Superior | Inferior | | Obs. | Sist. | Superior | Inferior |
| **BMW** | | | | | | | | | | | |
| Serie 5 (E34) 524td-525i-530i-540i (Ø carter 48,5 mm) | 88-90 | **E14309G 312 385** | | C | E | - | **E14026G** | ▼ | T | E | GM14/65 |
| Serie 5 (E34) 518i-520i-525i-525tds (Ø carter 45,3 mm) | 90-95 | **312 254** | | C | E | - | **E14026G** | ▼ | T | E | GM14/65 |
| Serie 5 (E34) 524td-525i-tds-530i-530 V8-535i-540 V8 (Ø carter 48,5 mm) | 90-95 | **E14015G 312 393** | | C | E | - | **E14026G** | ▼ | T | E | GM14/65 |
| Serie 5 (E39) 523i-525td-525Tds-528i-530d | 96-06/03 | **E14325G 556 832** | | MP | E | Bri | **E14020G 170 855** | | T | E | GM15/66 |
| Serie 5 (E39) 535i-540i | 96-06/03 | **E14013G 556 836** | | MP | E | Bri | **E14020G 170 855** | | T | E | GM15/66 |
| Serie 5 (E60) 525d-525i-530d-530i-535d-540i | 07/03-> | **E14043G 310 273 E14045G 310 274** | Izq. Der. | MP | E | Bri | **E14036G 310 275** | | T | E | GM15/66 |
| X1 20d - 20i sDrive | 10-> | **313 929 313 930** | Izq. Der. | MP | E | Bri | **313 933** | | T | E | E |
| X1 20d - 20i xDrive | 10-> | **313 931 313 932** | Izq. Der. | MP | E | Bri | **313 933** | | T | E | E |
| X3 20d - 20i - 35i | 04-10 | **E14025G 310 718 E14027G 310 719** | Izq. Der. | MP | E | Bri | **E14032G 310 720** | | T | E | GM12/43 |
| X3 20i - 20d - 35i xDrive | 03/12-> | **314 878 314 879** | Izq. Der. | MP | E | Bri | **-** | | | | |
| X5 30d - 35i - 50i | 05/00-06 | **E14011G 290 240 E14009G 290 239** | Izq. Der. | MP | E | Br | **311 233** | | T | E | GM16/66 |
| X5 30d - 35i - 50i xDrive (susp. estándar) | 07-> | **315 312** | | MP | E | Bri | **315 315 315 316** | Izq. Der. | T | E | GM16/66 |
| X6 35i - 50i xDrive (susp. estándar) | 08-> | **315 312** | | MP | E | Bri | **315 315 315 316** | Izq. Der. | T | E | GM16/66 |
| **CHERY** | | | | | | | | | | | |
| QQ | 10-> | **314 216 314 215** | Izq. Der. | MP | E | Br | **290 788** | | T | GM12/32 | GM12/32 |
| Tiggo | 08->14 | **313 807 313 806** | Izq. Der. | MP | E | Br | **8328G 316 274** | | T | E | GM16/38 |
| **CHRYSLER** | | | | | | | | | | | |
| Caravan | 86-94 | **E12301G 200 685** | | MP | E | Br | **12000G 200 687** | | T | GM12/42 | GM12/42 |
| Caravan (excepto NIVOMAT) | 95-00 | **E12313G 030 645** | | MP | E | Br | **12000G 200 687** | | T | GM12/42 | GM12/42 |
| Caravan (excepto NIVOMAT) | 01-07 | **310 202** | | MP | E | Br | **12000G 200 687** | | T | GM12/42 | GM12/42 |
| Neón 1.8 - 2.0 | 94-2/98 | **12305G 030 012** | | MP | E | Br | **12300G 030 013** | | MP | E | Br |
| Neón II | 99-05 | **300 153** | | MP | E | Br | **300 154** | | MP | E | Br |
| PT Cruiser | 01-> | **E12011G 290 870** | | MP | E | Br | **E12012G** | ▼ | T | GM13/60 | GM12/40 |
| Stratus | 95-06 | **E12311G 310 206** | | MP | E | Bri | **E12310G 310 174** | | MP | E | H |

| | | | | | Fijaciones | | | | | Fijaciones | |
|---|---|---|---|---|---|---|---|---|---|---|---|
| | | | Obs. | Sist. | Superior | Inferior | | Obs. | Sist. | Superior | Inferior |
| **CITRÖEN** | | | | | | | | | | | |
| 3CV y Furgoneta | 69-73 | **9001**<br>**316 257** | | T | GM12/32 | GM12/32 | **9002** | ⬇ | T | GM12/32 | GM12/32 |
| 3CV y Furgoneta / 3CV - IES América | 73-83 | **9001**<br>**316 257** | | T | GM12/32 | GM12/32 | **9001**<br>**316 257** | | T | GM12/32 | GM12/32 |
| Ami 8 / Mehari | <-83 | **9001**<br>**316 257** | | T | GM12/32 | GM12/32 | **9006** | ⬇ | T | GM14/34 | GM14/34 |
| AX | <-> | **7343G**<br>**316 221** | | C | E | - | **7032**<br>**316 210** | | T | GM12/40 | GM14/49 |
| Berlingo Furgon / Multispace (susp. original) | 07/96-> | **7375G**<br>**316 224**<br>**7377G**<br>**316 225** | Izq.<br>Der. | MP | E | Bri | **7040**<br>**316 212** | | T | GM16/45 | GM16/45 |
| Berlingo Furgon / Multispace (susp. baja) | 07/96-> | **7339G**<br>**316 220** | | MP | E | Bri | **7040**<br>**316 212** | | T | GM16/45 | GM16/45 |
| C3 | 05-<br>10/12 | **9005G**<br>**316 259**<br>**9003G**<br>**316 258** | Izq.<br>Der. | MP | E | Bri | **9020G**<br>**316 261** | | T | GM10/45 | GM14/48 |
| C3 New | 11/12-> | **316 916**<br>**316 917** | | MP | E | Bri | **315 956** | | T | GM10/45 | GM12/48 |
| C3 Aircross | 08-> | **316 914**<br>**316 915** | | MP | E | Bri | **315 956** | | T | GM10/45 | GM12/48 |
| C3 Picasso | 11-> | **316 914**<br>**316 915** | | MP | E | Bri | **315 956** | | T | GM10/45 | GM12/48 |
| C4 (excepto VTS) | 06-> | **7003G**<br>**316 202**<br>**7005G**<br>**316 203** | Izq.<br>Der. | MP | E | Br | **7002G**<br>**316 201** | | T | E | GM10/55 |
| C4 Lounge | 08/13-> | **315 231**<br>**315 232** | Izq.<br>Der. | MP | E | Br | **315 233** | | T | E | GM10/55 |
| C15 | <-> | **7335G**<br>**316 219** | | MP | E | Br | **-** | | | | |
| DS3 | 12/10-> | **315 441**<br>**315 442** | Izq.<br>Der. | MP | E | Bri | **315 454** | | T | GM10/45 | GM12/48 |
| Jumper Furgon | <-> | **2327G**<br>**280 975** | | MP | E | Br | **2040**<br>**316 037** | | T | GM16/38 | GM16/38 |
| Saxo | <-> | **7343G**<br>**316 221** | | C | E | - | **7032**<br>**316 210** | | T | GM12/40 | GM14/49 |
| Xsara 1.8 16V - 1.9D - TDI - 2.0 16V | 98-> | **7339G**<br>**316 220** | | MP | E | Bri | **7030G**<br>**316 209** | | T | GM12/40 | GM14/40 |
| Xsara Picasso | 00-> | **9313G**<br>**316 262** | | MP | E | Bri | **7020G**<br>**316 206** | | T | GM16/45 | GM16/45 |
| ZX | 93-> | **7339G**<br>**316 220** | | MP | E | Bri | **7030G**<br>**316 209** | | T | GM12/40 | GM14/40 |
| **DACIA** | | | | | | | | | | | |
| TLX 1410 - TX 1310 | <-> | **4301**<br>**4301i** | comp.<br>Inc. | T | E | E | **4054**<br>**316 131** | | T | E | E |
| **DAEWOO** | | | | | | | | | | | |
| Cielo / Nexia / Lanos | 96-> | **5305G**<br>**316 185** | | C | E | - | **5068** | ⬇ | T | E | GM13/32 |
| Racer / Espero | 92-> | **5305G**<br>**316 185** | | C | E | - | **5068** | ⬇ | T | E | GM13/32 |

| | | | | | | | | | | | |
|---|---|---|---|---|---|---|---|---|---|---|---|
| | | | | | Fijaciones | | | | | Fijaciones | |
| | | | Obs. | Sist. | Superior | Inferior | | Obs. | Sist. | Superior | Inferior |
| **DODGE** | | | | | | | | | | | |
| 1500-1.8 | 71-3/78 | **1301** | ▼ | C | E | - | **1016 316 005** | | T | E | G16/37 |
| 1500-1.8 / 1500-1.8 Rural (todos) | 78-> | **1305 316 023** | | C | E | - | **1016 316 005** | | T | E | G16/37 |
| Journey | 08->10 | **315 641 315 642** | Izq. Der. | MP | E | Br | **-** | | | | |
| Journey | 11-> | **315 641 315 642** | Izq. Der. | MP | E | Br | **316 939** | | T | E | GM12/46 |
| RAM 2500 4x4 | 04-> | **12007G 316 021** | | T | E | GM14/42 | **12008G 316 022** | | T | GM14/42 | GM14/42 |
| **FIAT** | | | | | | | | | | | |
| 128 Europa / Super Europa | <-> | **2301 316 041** | | MP | E | Br | **2302 316 042** | | MP | E | Br |
| 147- Spazio-Vivace | <-> | **2303 316 043** | | MP | E | Br | **2304 316 044** | | MP | E | Br |
| 500 / 500C | 11-> | **314 839 315 464** | Izq. Der. | MP | E | Br | **314 843** | | T | GM10/32 | GM12/44 |
| Brava JTD | 96-> | **E2361G 314 133** | | MP | E | Br | **2032G 316 036** | | T | GM10/38 | GM12/35 |
| Bravo HGT | 95-> | **E2351G** | ▼ | MP | E | Br | **2032G 316 036** | | T | GM10/38 | GM12/35 |
| Doblò | 10/12-> | **315 372 315 373** | Izq. Der. | MP | E | Br | **315 463** | | T | GM12/48 | GM12/43 |
| Ducato | 96-> | **2327G 280 975** | | MP | E | Br | **2040 316 037** | | T | GM16/38 | GM16/38 |
| Ducato 1.8Tn. | 07-> | **2007G 316 032** | | MP | E | Br | **2064/4 316 039** | | T | GM16/38 | GM16/38 |
| Duna (nafta/diesel) Sedan y Weekend | <-92 | **2311 316 048** | | MP | E | Br | **2312 316 049** | | MP | E | Br |
| Duna (nafta/diesel) Sedan y Weekend | 92-> | **2313G 316 050** | | MP | E | Br | **2318G 316 053** | | MP | E | Br |
| Fiorino 147- (Furgón y Pick Up) | 90-> | **2303 316 043** | | MP | E | Br | **2316** | ▼ | MP | E | Br |
| Fiorino Uno-Duna (Furgón y Pick up) | 96-> | **2313G 316 050** | | MP | E | Br | **2044G 316 038** | | T | GM14/32 | GM14/32 |
| Fiorino Evo | 14-> | **315 386 315 387** | Izq. Der. | MP | E | Br | **317 951** | ▲ | T | GM14/32 | GM14/32 |
| Fiorino Qubo | 12-> | **315 125 315 126** | Izq. Der. | MP | E | Br | **315 132** | | T | GM12/39 | GM12/52 |
| Grand Siena | 12-> | **315 386 315 387** | Izq. Der. | MP | E | Br | **316 387** | | | E | GM12/52 |
| Idea | 05-> | **2005G 316 031** | | MP | E | Br | **2014G 316 033** | | T | E | GM12/52 |
| Idea Adventure | 11-> | **315 317** | | MP | E | Br | **315 318** | | T | E | GM12/52 |
| Línea | 09-> | **315 384 315 385** | Izq. Der. | MP | E | Br | **2014G 316 033** | | T | E | GM12/52 |
| Marea / Weekend 2.0 nafta | 98-> | **E2345G** | ▼ | MP | E | Br | **2032G 316 036** | | T | GM10/38 | GM12/35 |
| Marea / Weekend 1.6 Nafta - 1.9 TD | 98-> | **E2361G 314 133** | | MP | E | Br | **2032G 316 036** | | T | GM10/38 | GM12/35 |
| Mobi | 09-> | **317 948 317 949** | Izq. Der.▲ | MP | E | Br | **317 950** | ▲ | T | E | GM10/40 |
| Palio Adventure | 05-> | **2317G 316 052** | | MP | E | Br | **2032G 316 036** | | T | GM10/38 | GM12/35 |

| | | | | | | | | | | | |
|---|---|---|---|---|---|---|---|---|---|---|---|
| | | | | | Fijaciones | | | | | Fijaciones | |
| | | | Obs. | Sist. | Superior | Inferior | | Obs. | Sist. | Superior | Inferior |
| **FIAT** | | | | | | | | | | | |
| Palio Adventure Locker | 05-> | **315 288** | | MP | E | Br | **2032G 316 036** | | T | GM10/38 | GM12/35 |
| Palio / Siena | <-00 | **2329G 316 054** | | C | E | - | **2330G 316 055** | | T | E | GM10/40 |
| Palio / Siena | 01-11 | **2317G 316 052** | | MP | E | Br | **2330G 316 055** | | T | E | GM10/40 |
| Palio Nuevo | 12-> | **315 386 315 387** | Izq. Der. | MP | E | Br | **315 388** | | T | E | GM10/40 |
| Palio Weekend | <-> | **2329G 316 054** | | C | E | - | **2032G 316 036** | | T | GM10/38 | GM12/35 |
| Punto | 07-> | **315 384 315 385** | Izq. Der. | MP | E | Br | **2014G 316 033** | | T | E | GM12/52 |
| Qubo Active / Dynamic | 12-> | **315 125 315 126** | Izq. Der. | MP | E | Br | **315 132** | | T | GM12/39 | GM12/52 |
| Regatta 85-100S / Weekend 85 | <-> | **2305** | ▼ | MP | E | Br | **2306 316 047** | | MP | E | Br |
| Regatta S-SC-2000 | <-90 | **2309** | | MP | E | Br | **2306 316 047** | | MP | E | Br |
| Regatta S-SC-2000 / Weekend Motor Tipo | 91-> | **2315 316 051** | | MP | E | Br | **2306 316 047** | | MP | E | Br |
| Stilo | 03-> | **314 626** | | MP | E | Br | **314 753** | | T | E | GM12/52 |
| Strada Working / Trekking | 04-> | **2317G 316 052** | | MP | E | Br | **2044G 316 038** | | T | GM14/32 | GM14/32 |
| Strada Adventure | 08-> | **315 288** | | MP | E | Br | **315 289** | | T | GM14/32 | GM14/32 |
| Tempra (Brasil - Argentina) | 92-> | **2319** | ▼ | C | E | - | **2320** | ▼ | C | E | - |
| Tipo 1.6 - 2.0 / Tempra (Europa) | 88-> | **2341G 316 056** | | MP | E | Br | **313 906** | | T | GM10/38 | GM12/35 |
| Toro 4x2 / 4x4 | 06/16-> | **317 738 317 739** | Izq. Der. ▲ | MP | E | Br | **317 740** | ▲ | T | E | GM12/36 |
| Uno | <-92 | **2311 316 048** | | MP | E | Br | **2312 316 049** | | MP | E | Br |
| Uno | 92-04/98 | **2313G 316 050** | | MP | E | Br | **2318G 316 053** | | MP | E | Br |
| Uno / Uno Fire | 05/98-> | **2313G 316 050** | | MP | E | Br | **2364G 316 057** | | MP | E | Br |
| Uno Way / Attractive | 11-> | **315 386 315 387** | Izq. Der. | MP | E | Br | **315 388** | | T | E | GM10/40 |
| **FORD** | | | | | | | | | | | |
| Courier Pick Up | 97-> | **3333G** | ▼ | MP | E | Bri | **3086** | ▼ | T | GM10/32 | GM12/40 |
| Courier Van | 97-> | **3323G 316 113** | | MP | E | Bri | **3098G 316 099** | | T | GM12/40 | GM12/53 |
| EcoSport 4x2 | 03-12 | **3319G** | | MP | E | Bri | **3012G 316 279** | | T | E | GM12/46 |
| EcoSport 4x4 | 04-12 | **-** | | | | | **3012G 316 279** | | T | E | GM12/46 |
| EcoSport Kinetic 4x2 / 4x4 | 13-> | **315 879 315 880** | Izq. Der. | MP | E | Br | **315 881** | | T | E | GM12/40 |
| Escort 1.6 (incluye XR3 1.8 Cabrio) | <-96 | **3303 316 106** | | MP | E | Bri | **3304 316 107** | | MP | E | Br |
| Escort 1.8 XR3 Coupe | <-97 | **3309** | ▼ | MP | E | Bri | **3304** | | MP | E | Br |
| Escort 1.6 y 1.8 (plataforma Orion) | 96-97 | **3311G 316 109** | | MP | E | Bri | **3064G 316 089** | | T | E | GM12/46 |
| Escort 1.8 (16 v) Zetec y diesel | 97-10/98 | **3321G 316 112** | | MP | E | Bri | **3080G 316 094** | | T | E | GM12/46 |

| | | | | | | | | | | | |
|---|---|---|---|---|---|---|---|---|---|---|---|
| | | | Obs. | Sist. | Fijaciones Superior | Fijaciones Inferior | | Obs. | Sist. | Fijaciones Superior | Fijaciones Inferior |
| **FORD** | | | | | | | | | | | |
| Escort 1.8 (16 v) Zetec y diesel | 11/98-> | **3337G 316 118** | | MP | E | Bri | **3080G 316 094** | | T | E | GM12/46 |
| Escort 1.8 (16 v) Coupe y Cabrio | 97-10/98 | **3321G 316 112** | | MP | E | Bri | **3080G 316 094** | | T | E | GM12/46 |
| Escort 1.8 (16 v) Coupe y Cabrio | 11/98-> | **3337G 316 118** | | MP | E | Bri | **3080G 316 094** | | T | E | GM12/46 |
| Escort 1.8 (16 v) Zetec y diesel Rural | 97-10/98 | **3321G 316 112** | | MP | E | Bri | **3102 316 100** | | T | T11/75 | GM12/32 |
| Escort 1.8 (16 v) Zetec y diesel Rural | 11/98-> | **3337G 316 118** | | MP | E | Bri | **3102 316 100** | | T | T11/75 | GM12/32 |
| Explorer / Ranger | <-95 | **3055/3 316 082** | | T | E | GM13/38 | **3056/3 316 083** | | T | G16/37 | GM13/38 |
| Explorer 4x2 / 4x4 | 95-> | **3077/3G 316 093** | | T | E | P | **3088/3 316 097** | | T | P | GM12/37 |
| Falcon / Sprint / Rural | <-> | **3003 316 060** | | T | E | P | **3004 316 061** | | T | E | E |
| Fiesta (todos) | <-96 | **3313 316 110** | | MP | E | Bri | **3068 316 092** | | T | GM10/32 | GM12/46 |
| Fiesta Zetec y Diesel | 96-01 | **3323G 316 113** | | MP | E | Bri | **3082G 316 095** | | T | E | H |
| Fiesta / Fiesta MAX | 02-11 | **3009G 316 277** | | MP | E | Bri | **3008G 316 278** | | T | E | GM10/46 |
| Fiesta Kinetic | 11-> | **315 922 315 923** | Izq. Der. | MP | E | Br | **315 564** | | T | E | GM12/40 |
| Focus | 99-08 | **3339G 316 119 3335G 316 117** | Izq. Der. | MP | E | Bri | **3112G 316 104** | | T | E | GM12/38 |
| Focus II | 08->13 | **313 285 313 283 313 289 313 287** | Izq. Der. | MP | E | Bri | **315 228** | | T | E | GM12/37 |
| Focus III | 14-> | **315 822 315 823** | Izq. Der.▲ | MP | E | Bri | **316 760** | | T | E | GM12/35 |
| Galaxy | 92-> | **3307G 316 108** | | C | E | - | **3060G 316 086** | | T | E | GM10/50 |
| Ka | 97-07 | **3325G 316 114** | | MP | E | Bri | **3084G 316 096** | | T | E | H |
| Ka línea nueva | 08->15 | **314 860** | | MP | E | Bri | **3032G 316 079** | | T | E | H |
| Ka Kinetic | 16-> | **317 735 317 736** | Izq. Der.▲ | MP | E | Br | **315 564** | | T | E | GM12/40 |
| Kuga | 10-13 | **315 245 317 326 315 246 317 327** | Izq. Der. | MP | E | Br | **315 247 316 989** | | T | E | GM12/36 |
| Mondeo | <-96 | **E3329 312 289** | ▼ | MP | E | Bri | **E3096 312 305** | | MP | E | Bri |
| Mondeo | 96-12/00 | **E3331G 312 330** | | MP | E | Bri | **E3092G 312 339** | | MP | E | Bri |
| Mondeo | 01-08/07 | **E3001G 312 937** | | MP | E | Bri | **E3002G 312 939** | | MP | E | Bri |
| Mondeo | 09/07-> | **313 748 313 749** | Izq. Der. | MP | E | Bri | **313 754** | | T | E | GM14/52 |
| Mondeo Rural | 96-12/00 | **E3331G 312 330** | | MP | E | Bri | **E3108G** | ▼ | T | GM12/55 | GM14/42 |
| Orion | 90-96 | **3311G 316 109** | | MP | E | Bri | **3064G 316 089** | | T | E | GM12/46 |

| | | | | | Fijaciones | | | | | Fijaciones | |
|---|---|---|---|---|---|---|---|---|---|---|---|
| | | | Obs. | Sist. | Superior | Inferior | | Obs. | Sist. | Superior | Inferior |
| **FORD** | | | | | | | | | | | |
| Pick Up F100 | 61-65 | **3015 316 068** | | T | E | E | **3016** | ⬇ | T | G16/37 | G16/37 |
| Pick Up F100 T.I.B. | 66-8/73 | **3017 316 069** | | T | E | E | **3018 316 071** | | T | G16/37 | GM13/32 |
| Pick Up F100 T.I.B. | 66-8/73 | **3017/3 316 070** | | T | E | E | **3018/3 316 072** | | T | G16/37 | GM13/32 |
| Pick Up F100 T.I.B. | 66-8/73 | **3017/4 314 700** | | T | E | E | **-** | | | | |
| Pick Up F100 T.I.B. | 9/73-3/92 | **3017 316 069** | | T | E | E | **3020 316 073** | | T | E | GM13/38 |
| Pick Up F100 T.I.B. | 9/73-3/92 | **3017/3 316 070** | | T | E | E | **3020/3 316 074** | | T | E | GM13/38 |
| Pick Up F100 T.I.B. | 9/73-3/92 | **3017/4 314 700** | | T | E | E | **3020/4** | ⬇ | T | E | GM13/38 |
| Pick Up F100/F150/F1000 | 4/92->99 | **3059 316 084** | | T | E | GM12/38 | **3062 316 087** | | T | E | GM14/66 |
| Pick Up F100/F150/F1000 | 4/92->99 | **3059/3 316 085** | | T | E | GM12/38 | **3062/3 316 088** | | T | E | GM14/66 |
| Pick Up F100/F150/F1000 | 4/92->99 | **3059/4 314 701** | | T | E | GM12/38 | **3062/4 314 702** | | T | E | GM14/66 |
| Pick Up F100/F150/F1000 con protector | 4/92->99 | **-** | | | | | **3062/8 314 703** | | T | E | GM14/66 |
| Pick Up F100 | 99-03 | **3103G 316 101** | | T | E | G16/37 | **3104 316 102** | | T | G16/37 | GM13/38 |
| Pick Up F100 | 99-03 | **3103/4 314 704** | | T | E | GM16/32 | **3104/4 314 705** | | T | G16/37 | GM13/38 |
| Pick Up F100 | 03-> | **3103G 316 101** | | T | E | G16/37 | **3014G 316 067** | | T | G16/37 | GM12/45 |
| Pick Up F100 | 03-> | **3103/4 314 704** | | T | E | GM16/32 | **-** | | | | |
| Pick Up F100 4x4 | 06-> | **3029/3G 316 077** | | T | GM16/32 | GM12/38 | **3030/3G 316 078** | | T | GM16/32 | GM12/45 |
| Pick Up F150 4x4 | <-> | **3055/3 316 082** | | T | E | GM13/38 | **3056/3 316 083** | | T | G16/37 | GM13/38 |
| Pick Up F250/F350 T.I.B. | 67-> | **3023/3 316 075** | | T | E | GM13/38 | **3024/3 316 076** | | T | G16/37 | GM13/38 |
| Pick Up F250/F350 T.I.B. | 67-> | **3023/4 314 683** | | T | E | GM13/38 | **-** | | | | |
| Pick Up F400 | 67-> | **3023/3 316 075** | | T | E | GM13/38 | **-** | | | | |
| Pick Up F400 | 67-> | **3023/4 314 683** | | T | E | GM13/38 | **-** | | | | |
| Pick Up Ranchero | <-> | **3003** | | T | E | P | **-** | | | | |
| Ranger 4x2 / 4x4 | 96-11 | **3077/3G 316 093** | | T | E | P | **3106/3G 316 103** | | T | G16/37 | GM12/38 |
| Ranger 4x2 / 4x4 con protector | 96-> | **-** | | | | | **3106/8 314 706** | | T | G16/37 | GM12/38 |
| Ranger 4x2 / 4x4 | 12-> | **315 467** | | T | E | GM16/38 | **315 468** | | T | GM20/43 | GM12/40 |
| S-MAX 2.0 / 2.3 | 08-> | **-** | | | | | **313 754** | | T | E | GM14/52 |
| Sierra Ghia "S" - GL (rodado13" y 14") / Coupe XR4 | <-> | **3301 316 105** | | MP | E | Bri | **3050 316 081** | | T | GM10/32 | GM10/51 |
| Sierra Rural (rodado13" y 14") | <-> | **3301 316 105** | | MP | E | Bri | **-** | | | | |
| Taunus Berlina y Coupe | <-> | **3005 316 062** | | T | GM10/58 | T8/77 | **3006 316 063** | | T | GM10/32 | G16/37 |

| | | | | | | | | | | | |
|---|---|---|---|---|---|---|---|---|---|---|---|
| | | | Obs. | Sist. | Fijaciones Superior | Fijaciones Inferior | | Obs. | Sist. | Fijaciones Superior | Fijaciones Inferior |
| **FORD** | | | | | | | | | | | |
| Transit 120 / 190 (incl. minibus) | 97-00 | **3327G 316 116** | | MP | E | Br | **3094** | ▼ | T | GM12/40 | GM12/40 |
| Transit | 01-10/10 | **3341G** | ▼ | MP | E | Bri | **3326G 313 505** | | T | GM14/57 | GM12/40 |
| Transit línea nueva | 11/10-> | **313 500** | | MP | E | Bri | **314 049** | | T | GM14/57 | GM12/48 |
| **GMC (CHEVROLET)** | | | | | | | | | | | |
| Agile | 09-> | **315 223** | | MP | E | Br | **315 224** | | T | E | GM10/36 |
| Astra Caravan (Familiar) | 92-98 | **-** | | | | | **E5100G 553 259** | | T | GM10/36 | E |
| Astra Sedan GL / GLS (mod. nuevo) | 98-> | **5319G 316 188 5321G 316 189** | Izq. Der. | MP | E | Br | **5110G 316 183** | | T | GM12/48 | GM15/40 |
| Aveo | 08-> | **314 766 314 767** | Izq. Der. | MP | E | Br | **5012G 315 525** | | T | E | GM10/50 |
| Blazer 4x2 | 93-> | **5059 316 174** | | T | GM13/42 | T10/83 | **5076 316 177** | | T | T10/83 | GM15/43 |
| Blazer 4x2 | 93-> | **5059/3 316 175** | | T | GM13/42 | T10/83 | **5076/3 316 178** | | T | T10/83 | GM15/43 |
| Blazer 4x4 | 93-> | **5105/3 316 182** | | T | GM13/43 | GM13/43 | **5076 316 177** | | T | T10/83 | GM15/43 |
| Blazer 4x4 | 93-> | **5105/3 316 182** | | T | GM13/43 | GM13/43 | **5076/3 316 178** | | T | T10/83 | GM15/43 |
| Captiva | 07-> | **316 761 316 762** | Izq. Der.▲ | | E | Br | | ▲ | | | |
| Celta | 11-> | **5307 316 358** | | MP | E | Br | **5074G 316 269** | | T | E | GM10/35 |
| Chevy | <-> | **5007** | ▼ | T | E | T9/67 | **-** | | | | |
| Cobalt | 13-> | **315 882 315 883** | Izq. Der. | MP | E | Br | **315 774** | | T | E | GM12/52 |
| Corsa Pick Up / Combo Van | 97-> | **5307 316 358** | | MP | E | Br | **5094 316 181** | | T | GM10/35 | GM10/35 |
| Corsa Classic Sedan / Wagon | 95-> | **5307 316 358** | | MP | E | Br | **5074G 316 269** | | T | E | GM10/35 |
| Corsa II | 02-> | **5023G 316 276 5021G 316 275** | Izq. Der. | MP | E | Br | **5074G 316 269** | | T | E | GM10/35 |
| Cruze | 11-> | **315 477 315 478** | Izq. Der. | MP | E | Br | **315 482** | | T | E | GM14/40 |
| Cruze III | 16-> | | ▲ | | | | **317 952** | ▲ | T | | |
| Grand Blazer | 98-> | **5061/3 316 176** | | T | GM15/43 | GM15/43 | **5078/3 316 179** | | T | GM15/43 | GM15/43 |
| Ipanema | <-> | **5305G 316 185** | | C | E | - | **-** | | | | |
| Kadett | <-> | **5305G 316 185** | | C | E | - | **5068** | ▼ | T | E | GM13/32 |
| Meriva | 03-> | **5023G 5021G** | Izq. Der. | MP | E | Br | **5006G 316 162** | | T | GM12/48 | GM15/40 |
| Montana | 10-> | **315 223** | | MP | E | Br | **315 383** | | T | GM12/48 | GM15/40 |
| Monza | 06/93-> | **5301** | ▼ | C | E | - | **5068** | ▼ | T | E | GM13/32 |
| Onix | 13-> | **315 882 315 883** | Izq. Der. | MP | E | Br | **315 774** | | T | E | GM12/52 |

| | | | | | | | | | | | |
|---|---|---|---|---|---|---|---|---|---|---|---|
| | | | | | Fijaciones | | | | | Fijaciones | |
| | | | Obs. | Sist. | Superior | Inferior | | Obs. | Sist. | Superior | Inferior |
| **GMC (CHEVROLET)** | | | | | | | | | | | |
| Pick Up C10-P10-P20 | 63-6/73 | **5017/3**<br>**316 165** | | T | GM13/45 | GM13/32 | **5018**<br>**316 166** | | T | GM13/35 | GM13/35 |
| Pick Up C10-P10-P20 | 7/73-79 | **5019/3**<br>**316 168** | | T | GM13/50 | GM13/32 | **5020**<br>**316 169** | | T | GM13/43 | GM13/43 |
| Pick Up C10 Sevel | 85-3/89 | **5033/3**<br>**316 170** | | T | G16/30 | GM13/32 | **5034**<br>**316 171** | | T | G16/28 | GM15/43 |
| Pick Up D20 C20 | 90-> | **5051/3**<br>**316 172** | | T | GM15/43 | GM15/43 | **5052/3**<br>**316 173** | | T | GM15/43 | GM15/43 |
| Pick Up Luv 4x2 | <-> | **8043G**<br>**316 268** | | T | E | GM12/32 | **8044G**<br>**316 230** | | T | G16/37 | G16/37 |
| Pick Up Luv 4x2 | 90-> | **8043/3G**<br>**316 228** | | T | E | GM12/32 | **8044/3G**<br>**316 229** | | T | G16/37 | G16/37 |
| Pick Up Luv 4x4 | 90-> | **8045/3G**<br>**316 231** | | T | E | GM12/32 | **8044G**<br>**316 230** | | T | G16/37 | G16/37 |
| Pick Up Luv 4x4 | 90-> | **8045/3G**<br>**316 231** | | T | E | GM12/32 | **8044/3G**<br>**316 229** | | T | G16/37 | G16/37 |
| Pick Up Silverado importada | 79-80 | **5033/3**<br>**316 170** | | T | G16/30 | GM13/32 | **5034**<br>**316 171** | | T | G16/28 | GM15/43 |
| Pick Up S10 4x2 | 93-02/12 | **5059**<br>**316 174** | | T | GM13/42 | T10/83 | **5076**<br>**316 177** | | T | T10/83 | GM15/43 |
| Pick Up S10 4x2 | 93-02/12 | **5059/3**<br>**316 175** | | T | GM13/42 | T10/83 | **5076/3**<br>**316 178** | | T | T10/83 | GM15/43 |
| Pick Up S10 4x4 | 93-02/12 | **5105/3**<br>**316 182** | | T | GM13/43 | GM13/43 | **5076**<br>**316 177** | | T | T10/83 | GM15/43 |
| Pick Up S10 4x4 | 93-02/12 | | | | | | **5076/3**<br>**316 178** | | T | T10/83 | GM15/43 |
| Pick Up S10 New 4x2 / 4x4 | 03/12-> | **315 562** | | T | E | GM14/39 | **315 563** | | T | G16/37 | G16/37 |
| Prisma | 13-> | **315 882**<br>**315 883** | Izq.<br>Der. | MP | E | Br | **315 774** | | T | E | GM12/52 |
| Silverado | 96-> | **5061/3**<br>**316 176** | | T | GM15/43 | GM15/43 | **5078/3**<br>**316 179** | | T | GM15/43 | GM15/43 |
| Sonic | 10/12-> | **315 882**<br>**315 883** | Izq.<br>Der. | MP | E | Br | **315 774** | | T | E | GM12/52 |
| Spark | 08-> | **314 998**<br>**314 999** | Izq.<br>Der. | MP | E | Br | **-** | | | | |
| Spin | 13-> | **315 882**<br>**315 883** | Izq.<br>Der. | MP | E | Br | **315 774** | | T | E | GM12/52 |
| Tigra | 99-> | **5307**<br>**316 358** | | MP | E | Br | **5074G**<br>**316 269** | | T | E | GM10/35 |
| Tracker 4x2 / 4x4 | 06/13> | **317 681**<br>**317 682** | Izq.<br>Der.▲ | MP | E | Br | **317 683** | ▲ | T | E | GM14/40 |
| Vectra | 96-07 | **5309G**<br>**316 186**<br>**5311G**<br>**316 187** | Izq.<br>Der. | MP | E | Br | **5088G**<br>**316 180** | | T | E | GM15/59 |
| Vectra / Vectra GT | 08-> | **5319G**<br>**316 188**<br>**5321G**<br>**316 189** | Izq.<br>Der. | MP | E | Br | **5010G**<br>**316 163** | | T | GM12/48 | GM14/40 |
| Zafira | 01-> | **5319G**<br>**316 188**<br>**5321G**<br>**316 189** | Izq.<br>Der. | MP | E | Br | **5010G**<br>**316 163** | | T | GM12/48 | GM14/40 |
| **HONDA** | | | | | | | | | | | |
| Accord / Coupe | 90-10/98 | **E19301G**<br>**200 884** | | MP | E | Bri | **E19002G**<br>**313 917** | | T | E | H |

| | | | | | | | | | | | |
|---|---|---|---|---|---|---|---|---|---|---|---|
| | | | | | Fijaciones | | | | | Fijaciones | |
| | | | Obs. | Sist. | Superior | Inferior | | Obs. | Sist. | Superior | Inferior |
| **HONDA** | | | | | | | | | | | |
| CR-V | 96-06/02 | **E8099G** | ▼ | T | E | Bri | **E8100G** | ▼ | T | E | GM10/43 |
| CR-V II | 07/02-06 | **313 768**<br>**316 912**<br>**313 767**<br>**316 913** | Izq.<br>Der. | T | E | Br | **317 311** | | T | E | GM14/44 |
| CR-V III | 07-12 | **316 878**<br>**316 879** | Izq.<br>Der. | MP | E | Br | **317 311** | | T | E | GM14/44 |
| CR-V IV | 13-> | **316 878**<br>**316 879** | Izq.<br>Der. | MP | E | Br | **-** | | | | |
| City | 11-> | **315 380**<br>**315 381** | Izq.<br>Der. | MP | E | Br | **315 382** | | T | E | GM10/40 |
| Civic CRX III | 92-12/98 | **E8427G**<br>**230 017**<br>**E8391G**<br>**230 016** | Izq.<br>Der. | MP | E | Bri | **E8326G** | ▼ | T | E | H |
| Civic Sedan y Coupe | 91-96 | **E8427G**<br>**230 017**<br>**E8391G**<br>**230 016** | Izq.<br>Der. | MP | E | Bri | **E8326G** | ▼ | T | E | H |
| Civic Sedan | 97-99 | **-** | | | | | **8084G** | | T | E | H |
| Civic Sedan | 06-11 | **315 225**<br>**315 226** | Izq.<br>Der. | MP | E | Br | **315 227** | | T | E | GM12/40 |
| Fit | 05-08 | **19017G**<br>**314 029**<br>**19015G**<br>**314 028** | Izq.<br>Der. | MP | E | Br | **19004G**<br>**316 029** | | T | E | GM10/40 |
| Fit | 09-> | **315 380**<br>**315 381** | Izq.<br>Der. | MP | E | Br | **315 382** | | T | E | GM10/40 |
| HR-V | 15-> | | ▲ | T | 680 | 432 | **317 684** | ▲ | T | E | GM10/40 |
| **HYUNDAI** | | | | | | | | | | | |
| Galloper | 9/97-> | **17001/3** | ▼ | T | E | T9/67 | **17004/3** | ▼ | T | G16/37 | GM16/38 |
| H1 Minibus / Van | 98-03/08 | **3039**<br>**316 080** | | T | E | GM12/32 | **-** | | | | |
| H1 Minibus / Van | 04/08-> | **314 892**<br>**314 893** | Izq.<br>Der. | MP | E | Br | **-** | | | | |
| H100 | 94-> | **8053**<br>**316 234** | | T | E | GM12/32 | **4032**<br>**316 126** | | T | G16/37 | G16/37 |
| i10 | 10-> | **315 220**<br>**315 221** | Izq.<br>Der. | MP | E | Br | **-** | | | | |
| Santa Fe | 01-06 | **315 306**<br>**315 307** | Izq.<br>Der. | MP | E | Br | **-** | | | | |
| Santa Fe | 07-12 | **316 710**<br>**316 711** | Izq.<br>Der. | MP | E | Br | **-** | | | | |
| Tucson | 07-10 | **314 994**<br>**314 995** | Izq.<br>Der. | MP | E | Br | **314 996**<br>**314 997** | Izq.<br>Der. | MP | E | Br |
| **ISUZU** | | | | | | | | | | | |
| Pick Up 4x2 | <-> | **8043G**<br>**316 268** | | T | E | GM12/32 | **8044G**<br>**316 230** | | T | G16/37 | G16/37 |
| Pick Up 4x2 | <-> | **8043/3G**<br>**316 228** | | T | E | GM12/32 | **8044/3G**<br>**316 229** | | T | G16/37 | G16/37 |
| Pick Up 4x4 | <-> | **8045/3G**<br>**316 231** | | T | E | GM12/32 | **8044G**<br>**316 230** | | T | G16/37 | G16/37 |
| Pick Up 4x4 | <-> | **8045/3G**<br>**316 231** | | T | E | GM12/32 | **8044/3G**<br>**316 229** | | T | G16/37 | G16/37 |

| | | | | | | | | | | | |
|---|---|---|---|---|---|---|---|---|---|---|---|
| | | | | | Fijaciones | | | | | Fijaciones | |
| | | | Obs. | Sist. | Superior | Inferior | | Obs. | Sist. | Superior | Inferior |
| **ISUZU** | | | | | | | | | | | |
| Rodeo | 90-95 | **8045/3G 316 231** | | T | E | GM12/32 | **8046/3** | ▼ | T | GM14/37 | G19/44 |
| Trooper 4x4 | 92-> | **3039 316 080** | | T | E | GM12/32 | **8046/3** | ▼ | T | GM14/37 | G19/44 |
| **JEEP** | | | | | | | | | | | |
| Cherokee Sport 2WD / 4WD | 91-01 | **12003G 316 019** | | T | E | T8/61 | **12004G 316 020** | | T | T11/75 | G16/37 |
| Compass | 07-> | **312 985 312 984** | Izq. Der. | MP | E | Br | **-** | | | | |
| Grand Cherokee / Wrangler | <-04 | **12003G 316 019** | | T | E | T8/61 | **12006G 316 266** | | T | G16/37 | GM12/38 |
| Grand Cherokee | 05-11 | **313 263** | | MP | E | Brl | **-** | | | | |
| Jeep | <-73 | **4033 316 127** | | T | G16/37 | G16/37 | **4032 316 126** | | T | G16/37 | G16/37 |
| Renegade 4x2 | 02/16-> | **317 824 317 825** | Izq. Der.▲ | MP | E | Br | **317 946 317 947** | Izq. Der.▲ | MP | E | Br |
| Patriot | 10-> | **312 985 312 984** | Izq. Der. | MP | E | Br | **-** | | | | |
| **KIA** | | | | | | | | | | | |
| Besta | 96-98 | **8067G 316 241** | | T | E | T9/62 | **8090G 316 246** | | T | G16/37 | G16/37 |
| Besta | 96-98 | **8067/3G 316 240** | | T | E | T9/62 | **8090/3G 316 245** | | T | G16/37 | G16/37 |
| K2500 | 08-> | **316 851** | | T | E | GM12/30 | **316 852** | | T | GM20/42 | GM20/42 |
| Picanto | 10-> | **315 220 315 221** | Izq. Der. | MP | E | Br | **-** | | | | |
| Soul | 09-14 | **314 695 314 696** | Izq. Der. | MP | E | Br | **-** | | | | |
| Sportage | 05-10 | **314 013 314 012** | Izq. Der. | MP | E | Br | **314 015 314 014** | Izq. Der. | MP | E | Br |
| **LAND ROVER** | | | | | | | | | | | |
| Discovery / Defender | <-> | **8051 316 233** | | T | E | E | **8050 316 232** | | T | G19/40 | E |
| Freelander | 11/00-06 | **E24013G 310 022 E24011G 310 021** | Izq. Der. | MP | E | Br | **E24012G 310 024 E24010G 310 023** | | MP | E | Br |
| Range - Rover | 70-94 | **8051 316 233** | | T | E | E | **8050 316 232** | | T | G19/40 | E |
| **MAZDA** | | | | | | | | | | | |
| 323 | 94-08/98 | **E8311G 312 676 E8313G 312 675** | Izq. Der. | MP | E | Br | **-** | | | | |
| 323 | 09/98-01 | **E8299G 313 402 E8297G 313 401** | Izq. Der. | MP | E | Br | **313 627 313 626** | Izq. Der. | MP | E | Br |
| Pick Up 4x2 | <-91 | **-** | | | | | **3018 316 071** | | T | G16/37 | GM13/32 |
| Pick Up 4x2 | 92-96 | **8045/3G 316 231** | | T | E | GM12/32 | **8090G 316 246** | | T | G16/37 | G16/37 |

| | | | | | | | | | | | |
|---|---|---|---|---|---|---|---|---|---|---|---|
| | | | | | Fijaciones | | | | | Fijaciones | |
| | | | Obs. | Sist. | Superior | Inferior | | Obs. | Sist. | Superior | Inferior |
| **MAZDA** | | | | | | | | | | | |
| Pick Up 4x2 | 92-96 | **-** | | | | | **8090/3G 316 245** | | T | G16/37 | G16/37 |
| Pick Up B2500 / B2600 4x2 | 96-> | **8045/3G 316 231** | | T | E | GM12/32 | **8090G 316 246** | | T | G16/37 | G16/37 |
| Pick Up B2500 / B2600 4x2 | 96-> | **-** | | | | | **8090/3G 316 245** | | T | G16/37 | G16/37 |
| Pick Up 4x4 | <-96 | **8045/3G 316 231** | | T | E | GM12/32 | **-** | | | | |
| **MERCEDES BENZ** | | | | | | | | | | | |
| 190-190D-190E (Chasis 201) | 86-93 | **E6303G 115 070** | | MP | E | Br | **E6302G** | ▼ | T | E | GM10/40 |
| 190-190D-190E (Chasis 201) | 86-93 | **E6305G 115 069** | | MP | E | Br | **E6302G** | ▼ | T | E | GM10/40 |
| 200D/E-220E-230E-250D-280E-300D/E-300TD | 86-6/93 | **E6303G 115 070** | | MP | E | Br | **E6302G** | ▼ | T | E | GM10/40 |
| 200D/E-220E-230E-250D-280E-300D/E-300TD | 86-6/93 | **E6305G 115 069** | | MP | E | Br | **E6302G** | ▼ | T | E | GM10/40 |
| Clase A 140-160-170-190 (Chasis 168) | 98-> | **6307G 316 193** | | MP | E | Br | **553 665 317 355** | | T | GM10/78 | GM12/44 |
| Clase A 200-250 (Chasis 176) | 05/13-> | **315 267 315 268** | Izq. Der. | MP | E | Br | **315 269 317 474** | | T | E | GM10/50 |
| Clase B 160-170-180-200 (Chasis 245) | 05-12/11 | **E6023G 315 293** | | MP | E | Br | **317 337** | | | E | GM10/40 |
| Clase B 200 (Chasis 246) | 05/13-> | **315 267 315 268** | Izq. Der. | MP | E | Br | **315 269** | | T | E | GM10/50 |
| Clase C 200-220-220D-230-250D 280 (Chasis 202) | 93-05/00 | **170 450 316 947** | | T | E | GM10/40 | **E6018G 170 451** | | T | E | GM10/40 |
| Clase C 180-200-220-240-270-320 (Chasis 203) | 05/00-12/06 | **E6009G 553 871** | | MP | E | Br | **553 870 317 268** | | T | E | GM10/40 |
| Clase C 180-200-220-280-320-350 (Chasis 204) | 01/07-> | **E6021G 313 200** | | MP | E | Br | **313 201 317 266** | | T | E | GM10/48 |
| Clase E (Chasis 124) | 89-96 | **E6303G 115 070** | | MP | E | Br | **E6302G** | ▼ | T | E | GM10/40 |
| Clase E (Chasis 124) | 89-96 | **E6305G 115 069** | | MP | E | Br | **E6302G** | ▼ | T | E | GM10/40 |
| Clase E (Chasis 210) | 96-02 | **315 987 317 258** | | T | E | GM10/40 | **124 393 317 259** | | T | E | GM10/40 |
| Clase M (Chasis 163) | 99-06 | **6011G** | | T | E | GM14/50 | **311 995** | | T | E | R |
| Clase M (Chasis 164) | 07->12/11 | **315 526** | | MP | E | H | **-** | | | | |
| GLK | 10-> | **314 006** | | MP | E | Br | **314 034 317 385** | | T | E | GM10/48 |
| MB 180 D Kombi | <-> | **6013/3 316 190** | | T | GM12/40 | GM16/40 | **6014/3** | ▼ | T | GM12/40 | GM16/40 |
| Sprinter Kombi / Pick Up / Furgon 3,5 t. | <-> | **6301G 315 700** | | MP | E | Br | **6012 315 767** | | T | GM14/40 | GM12/40 |
| Sprinter 412 4,6 t. (suspensión corta) | 12/00-> | **6301G 315 700** | | MP | E | Br | **6012 315 767** | | T | GM14/40 | GM12/40 |
| Sprinter 412 4,6 t. (suspensión larga) | 12/00-> | **6313G 315 701** | | MP | E | Br | **6036 316 192** | | T | GM14/55 | GM14/40 |
| Sprinter 413 4,6 t. (modelo nuevo) | 02-> | **6313G 315 701** | | MP | E | Br | **6036 316 192** | | T | GM14/55 | GM14/40 |
| Sprinter 415 NCV3 (3.8 Tn) | 12-> | **314 421** | | MP | E | Br | **315 466** | | T | GM14/40 | GM12/40 |
| Sprinter 515 NCV3 (5.0 Tn) | 12-> | **314 422** | | MP | E | Br | **315 465** | | T | GM14/40 | GM14/40 |

| | | | | | | | | | | | |
|---|---|---|---|---|---|---|---|---|---|---|---|
| | | | | | Fijaciones | | | | | Fijaciones | |
| | | | Obs. | Sist. | Superior | Inferior | | Obs. | Sist. | Superior | Inferior |
| **MERCEDES BENZ** | | | | | | | | | | | |
| Vito (Chasis 638) | 98-07/03 | **E6039G 310 016** | | MP | E | Br | **E6016G** | ⬇ | T | GM14/40 | GM14/40 |
| Vito (Chasis 639) | 08/03-> | **311 645** | | MP | E | Br | **311 647 315 572** | | T | GM14/46 | GM14/40 |
| Viano (Chasis 638) | 98-04 | **E6039G 310 016** | | MP | E | Br | **E6016G** | ⬇ | T | GM14/40 | GM14/40 |
| Viano (Chasis 639) | 05-> | **311 645** | | MP | E | Br | **311 647 315 572** | | T | GM14/46 | GM14/40 |
| **MITSUBISHI** | | | | | | | | | | | |
| Colt / Mirage / Lancer | 06/92-12/95 | **E22301G 290 780 E22303G 290 781** | Izq. Der. | MP | E | Br | **E8320G** | ⬇ | T | E | GM12/47 |
| Colt / Lancer | 96-12/97 | **E22305G 230 130 E22307G 230 131** | Izq. Der. | MP | E | Br | **E8320G** | ⬇ | T | E | GM12/47 |
| L 200 4x2 | ->89 | **8001 316 226** | | T | E | T8/60 | **8002 316 227** | | T | G16/37 | G16/37 |
| L 200 4x2 | 89-97 | **8133/3 316 253** | | T | E | T9/71 | **8134/3 316 254** | | T | G16/37 | G16/37 |
| L 200 4x4 Cab.simple / doble | 92-96 | **8133/3 316 253** | | T | E | T9/71 | **22006 316 040** | | T | G16/37 | G16/37 |
| L200 4x4 | 97-04 | **8055/3G 316 235** | | T | E | GM12/34 | **22006 316 040** | | T | G16/37 | G16/37 |
| L200 DI-D 4WD | 08-> | **-** | | | | | **8134/3 316 254** | | T | G16/37 | G16/37 |
| L 300 4x2 | <-> | **8053 316 234** | | T | E | GM12/32 | **8002 316 227** | | T | G16/37 | G16/37 |
| Montero | 93-00 | **8055/3G 316 235** | | T | E | GM12/34 | **8054/3** | ⬇ | T | E | GM16/38 |
| Outlander / Outlander Sport | 07/05-> | **313 882 313 881** | Izq. Der. | MP | E | Br | **-** | | | | |
| Space Wagon | 99-> | **280 773 316 901 280 774 316 902** | Izq. Der. | MP | E | Br | **-** | | | | |
| **NISSAN** | | | | | | | | | | | |
| March 1.6 | 08-> | **316 736 316 735** | | MP | E | Br | | | | | |
| Pathfinder 4WD | ->96 | **8045/3G 316 231** | | T | E | GM12/32 | **8090G 316 246** | | T | G16/37 | G16/37 |
| Pathfinder 4WD | ->96 | **-** | | | | | **8090/3G 316 245** | | T | G16/37 | G16/37 |
| Pathfinder 4WD V6 | 09/97-01/99 | **E23015G 230 467 E23017G 230 468** | Izq. Der. | MP | E | Br | **E23018G** | ⬇ | T | G16/42 | G12/48 |
| Pick Up 2WD (USA) / D21 y D22 4x2 | <-> | **8043G 316 268** | | T | E | GM12/32 | **8064G 316 239** | | T | G16/37 | G16/37 |
| Pick Up 2WD (USA) / D21 y D22 4x2 | <-> | **8043/3G 316 228** | | T | E | GM12/32 | **8064G 316 239** | | T | G16/37 | G16/37 |
| Pick Up 720 4x2 Cabina simple | ->94 | **8043G 316 268** | | T | E | GM12/32 | **-** | | | | |
| Pick Up 720 4x2 Cabina simple | ->95 | **8043/3G 316 228** | | T | E | GM12/32 | **-** | | | | |

| | | | | | | | | | | | |
|---|---|---|---|---|---|---|---|---|---|---|---|
| | | | | | Fijaciones | | | | | Fijaciones | |
| | | | Obs. | Sist. | Superior | Inferior | | Obs. | Sist. | Superior | Inferior |
| **NISSAN** | | | | | | | | | | | |
| Pick Up D21 4x4 | <-> | **8043G<br>316 268** | | T | E | GM12/32 | **8090G<br>316 246** | | T | G16/37 | G16/37 |
| Pick Up D21 4x4 | <-> | **8043/3G<br>316 228** | | T | E | GM12/32 | **8090/3G<br>316 245** | | T | G16/37 | G16/37 |
| Pick Up D22 4x4 | 98-> | **8043G<br>316 268** | | T | E | GM12/32 | **8090G<br>316 246** | | T | G16/37 | G16/37 |
| Pick Up D22 4x4 | 98-> | **8043/3G<br>316 228** | | T | E | GM12/32 | **8090/3G<br>316 245** | | T | G16/37 | G16/37 |
| Pick Up Frontier 4x2 y 4x4 | 03-> | **23043/3G<br>316 045** | | T | E | GM12/32 | **8090/3G<br>316 245** | | T | G16/37 | G16/37 |
| Pick Up NP 300 4x2 | 10-> | **8043G<br>316 268** | | T | E | GM12/32 | **8064G<br>316 239** | | T | G16/37 | G16/37 |
| Sentra 2.0 | 10-13 | **313 238<br>313 237** | Izq.<br>Der. | MP | E | Br | **-** | | | | |
| Sentra 1.8 - 2.0 | 14-> | **315 892<br>315 893** | Izq.<br>Der. | MP | E | Br | **315 533** | | T | E | GM12/40 |
| Serena Van | 93-> | **230 168<br>317 190<br>230 169<br>317 191** | Izq.<br><br>Der. | MP | E | Br | **8002<br>316 227** | | T | G16/37 | G16/37 |
| Terrano 4x4 | ->95 | **8045/3G<br>316 231** | | T | E | GM12/32 | **8090G<br>316 246** | | T | G16/37 | G16/37 |
| Terrano 4x4 | ->95 | **-** | | | | | **8090/3G<br>316 245** | | T | G16/37 | G16/37 |
| Terrano II 4x4 | 95-> | **8045/3G<br>316 231** | | T | E | GM12/32 | **-** | | | | |
| Tiida | 08-> | **313 902<br>313 901** | Izq.<br>Der. | MP | E | Br | **315 533** | | T | E | GM12/40 |
| Versa | 08-> | **316 736<br>316 735** | | MP | E | Br | | | | | |
| X-Terra | 03-09 | **23043/3G<br>316 045** | | T | E | GM12/32 | **8090/3G<br>316 245** | | T | G16/37 | G16/37 |
| X-Trail | 07-> | **314 043<br>314 042** | Izq.<br>Der. | MP | E | Br | **314 044** | | T | GM12/65 | GM12/45 |
| **PEUGEOT** | | | | | | | | | | | |
| 106 | <-> | **7343G<br>316 221** | | C | E | - | **7032<br>316 210** | | T | GM12/40 | GM14/49 |
| 205 | 93-> | **7335G<br>316 219** | | MP | E | Bri | **7028G<br>316 208** | | T | GM12/40 | GM14/40 |
| 206 / SW | 99-> | **7371G<br>316 222<br>7373G<br>316 223** | Der.<br><br>Izq. | MP | E | Bri | **7048<br>316 213** | | T | GM13/40 | GM14/62 |
| 207 Sedan y Compact | 08-> | **7371G<br>316 222<br>7373G<br>316 223** | Der.<br><br>Izq. | MP | E | Bri | **7048<br>316 213** | | T | GM13/40 | GM14/62 |
| 207 CC / GTI | 10-> | **313 679<br>313 681** | Izq.<br>Der. | MP | E | BrI | **313 683** | | T | GM10/55 | GM12/48 |
| 208 1.5 | 06/13-> | **316 916<br>316 917** | | MP | E | Bri | **315 957** | | T | GM10/55 | GM12/48 |
| 208 1.6 Vti | 06/13-> | **316 918<br>316 919** | | MP | E | Bri | **315 957** | | T | GM10/55 | GM12/48 |
| 306 | <-> | **7339G<br>316 220** | | MP | E | Bri | **7030G<br>316 209** | | T | GM12/40 | GM14/40 |

| | | | | | Fijaciones | | | | | Fijaciones | |
|---|---|---|---|---|---|---|---|---|---|---|---|
| | | | Obs. | Sist. | Superior | Inferior | | Obs. | Sist. | Superior | Inferior |
| **PEUGEOT** | | | | | | | | | | | |
| 307 | 01-> | **7003G 316 202 7005G 316 203** | Izq. Der. | MP | E | Br | **7002G 316 201** | | T | E | GM10/55 |
| 308 | 11-> | **315 231 315 232** | Izq. Der. | MP | E | Br | **315 233** | | T | E | GM10/55 |
| 308 CC | 10-> | | ▲ | | | | **315 139** | | T | E | GM10/55 |
| 3008 | 10-> | **315 851 315 852** | Izq. Der. | MP | E | Br | **315 853** | | T | E | GM10/55 |
| 404 Berlina - sistema Polimek | <-> | **7305 316 214** | | C | E | - | **7010 316 204** | | T | E | E |
| 405 GR-SR-SRI (incluido Break) | <-> | **7331G 316 218** | | MP | E | Bri | **7020G 316 206** | | T | GM16/45 | GM16/45 |
| 406 / Break / Coupe / TD | 97-> | **E7363G 200 847 E7361G 200 846** | Izq. Der. | MP | E | Bri | **7036G 316 211** | | T | E | GM12/60 |
| 407 Sedan y Coupe | 04-> | **400 062 313 562** | | T | E | GM16/64 | **400 063 313 564** | | T | E | GM12/60 |
| 408 | 11-> | **315 231 315 232** | Izq. Der. | MP | E | Br | **315 233** | | T | E | GM10/55 |
| 504 GLD-GLS-SL | <-81 | **7305 316 214** | | C | E | - | **7010 316 204** | | T | E | E |
| 504 GRII-GRD- GR / 505 SR-GR-SRD | 81-86 | **7311 317 668** | | C | E | - | **7010 316 204** | | T | E | E |
| 504 y 505 SR-GR-SRD | 86-> | **7321 316 215** | | C | E | - | **7010 316 204** | | T | E | E |
| 504 Rural | <-> | **7311 317 668** | | C | E | - | **-** | | | | |
| 505 Familiar G. Tour | 86-> | **7321 316 215** | | C | E | - | **-** | | | | |
| 508 | 12-> | **316 331 316 332** | Izq. Der.▲ | MP | E | Br | **314 849** | ▲ | T | E | GM12/60 |
| Boxer | 97-> | **2327G 280 975** | | MP | E | Br | **2040 316 037** | | T | GM16/38 | GM16/38 |
| Expert Furgon 1.9D | 99-06 | **310 765 310 764** | Izq. Der. | MP | E | Br | **280 435** | | | GM12/45 | GM12/45 |
| Expert Furgon 1.6-2.0 Hdi | 08-13 | **314 032 314 033** | Izq. Der. | MP | E | Br | **314 663** | | | GM12/45 | GM14/45 |
| Partner (suspensión original) | 07/96-> | **7375G 316 224 7377G 316 225** | Izq. Der. | MP | E | Bri | **7040 316 212** | | T | GM16/45 | GM16/45 |
| Partner (suspensión baja) | 07/96-> | **7339G 316 220** | | MP | E | Bri | **7040 316 212** | | T | GM16/45 | GM16/45 |
| Pick Up 404 | <-> | **7305 316 214** | | C | E | - | **-** | | | | |
| Pick Up 504 | 81-3/83 | **7315** | ▼ | C | E | - | **7018 316 205** | | T | GM14/32 | GM14/32 |
| Pick Up 504 | 4/83-9/88 | **7323 316 216** | | C | E | - | **7018 316 205** | | T | GM14/32 | GM14/32 |
| Pick Up 504 | 10/88-6/92 | **7329 316 217** | | C | E | - | **7018 316 205** | | T | GM14/32 | GM14/32 |
| Pick Up 504 | 06/92-> | **7329 316 217** | | C | E | - | **7022 316 207** | | T | GM14/32 | GM14/32 |

| | | | | | | | | | | | |
|---|---|---|---|---|---|---|---|---|---|---|---|
| | | | | | Fijaciones | | | | | Fijaciones | |
| | | | Obs. | Sist. | Superior | Inferior | | Obs. | Sist. | Superior | Inferior |
| **RASTROJERO** | | | | | | | | | | | |
| Rastrojero (todos) | <-> | **9013 316 260** | | T | E | E | **9014** | ▼ | T | GM12/32 | GM12/32 |
| **RENAULT** | | | | | | | | | | | |
| Clio 1.4 Energy / 1.9 Diesel (plato bajo) | <-> | **4363 316 158** | | MP | E | Br | **4070G 316 136** | | T | GM12/45 | GM12/35 |
| Clio 1.6 RL / RT | 96-2/99 | **4335 316 151** | | MP | E | Br | **4070G 316 136** | | T | GM12/45 | GM12/35 |
| Clio 1.6 RL / RT/ Diesel | 3/99-> | **4379 316 160** | | MP | E | Br | **4070G 316 136** | | T | GM12/45 | GM12/35 |
| Clio II 1.2 | 03->10 | **4339G 316 153** | | MP | E | Br | **4098G 316 863** | | T | E | GM12/40 |
| Clio II 1.2 | 11->08/12 | **317 316** | | MP | E | Br | **4098G 316 863** | | T | E | GM12/40 |
| Clio II 1.2 (Mío) | 09/12-> | **315 777** | | MP | E | Br | **4098G 316 863** | | T | E | GM12/40 |
| Clio II 1.5D / 1.6 / 1.9D | 12/99-> | **4381G 316 161** | | MP | E | Br | **4098G 316 863** | | T | E | GM12/40 |
| Duster 4x2 | 11-> | **316 292** | | MP | E | Br | **315 565** | | T | E | GM14/40 |
| Duster 4x4 | 11> | **316 292** | | MP | E | Br | **315 361 316 290** | | MP | E | Br |
| Duster Oroch | 16-> | **316 292** | | MP | E | Br | **317 737** | ▲ | MP | E | Br |
| Express | <-96 | **4347 110 638** | | MP | E | Br | **4068 316 135** | | T | GM12/40 | GM12/34 |
| Express | 97-> | **4361 316 157** | | MP | E | Br | **4068 316 135** | | T | GM12/40 | GM12/34 |
| Fluence | 10-> | **315 531 316 553** | | MP | E | Br | **315 532 316 554** | | T | GM10/75 | GM12/45 |
| Fuego Coupe | 81-> | **4307** | ▼ | T | E | E | **4048** | | T | E | E |
| Kangoo Express / Kombi | 98-10/13 | **4355G 316 155** | | MP | E | Br | **4078 316 138** | | T | GM12/42 | GM12/38 |
| Kangoo III | 11/13-> | **316 555** | | MP | E | Br | **4078 316 138** | | T | GM12/42 | GM12/38 |
| Koleos | 08-12 | **314 043 314 042** | Izq. Der. | MP | E | Br | **314 044** | | T | GM12/65 | GM12/45 |
| Laguna | 95-00 | **4365G 316 159** | | MP | E | Br | **4082G 316 283** | | T | GM14/40 | GM12/57 |
| Laguna Nevada | 96-01 | **4365G 316 159** | | MP | E | Br | **4082G 316 283** | | T | GM14/40 | GM12/57 |
| Laguna II | 01-08 | **400 075 313 577** | | MP | E | Br | **290 740 290 739** | | T | GM12/65 | GM12/69 |
| Logan | 08->10/13 | **315 236** | | MP | E | Br | **4010G 316 123** | | T | E | GM12/40 |
| Logan II | 11/13-> | **316 926** | | MP | E | Br | **316 886** | | T | E | GM14/40 |
| Master Corto / Largo | 99->03/13 | **4035G 316 128** | | T | GM12/32 | GM14/52 | **4096G 316 141** | | T | GM12/32 | GM14/32 |
| Master III | 05/13-> | **317 422** | ▲ | MP | E | Br | **317 274** | ▲ | | | |
| Megane Scenic (Origen Francia) | 98-> | **4367G 200 476** | | MP | E | Br | **4076G 316 137** | | T | GM14/59 | GM12/62 |
| Megane Scenic (Origen Brasil) | 98-> | **4351G 316 154** | | MP | E | Br | **4076G 316 137** | | T | GM14/59 | GM12/62 |
| Megane Scenic 1.6 16V | 99-> | **4351G 316 154** | | MP | E | Br | **4076G 316 137** | | T | GM14/59 | GM12/62 |
| Megane / Megane serie II | 96-04 | **4351G 316 154** | | MP | E | Br | **4094G 316 140** | | T | GM14/59 | GM14/34 |

| | | | | | Fijaciones | | | | | Fijaciones | |
|---|---|---|---|---|---|---|---|---|---|---|---|
| | | | Obs. | Sist. | Superior | Inferior | | Obs. | Sist. | Superior | Inferior |
| **RENAULT** | | | | | | | | | | | |
| Megane Coupe 8V (excluye 16V) | 96-> | **4351G 316 154** | | MP | E | Br | **4094G 316 140** | | T | GM14/59 | GM14/34 |
| Megane II | 05-> | **314 898** | | MP | E | Bri | **4006G 316 122** | | T | GM10/75 | Esp |
| R4L - R4F - R4S - R6 | 70-> | **4017 316 124** | | T | E | GM10/32 | **4018 316 125** | | T | GM10/32 | E |
| R9 y R11 (todos) | <-> | **4309G 316 146** | | MP | E | Br | **4052 316 130** | | T | E | GM14/32 |
| R12 L - TS - TL - Break | <-89 | **4301 316 142 4301i 316 143** | comp. inc. | T | E | E | **4020 316 281** | | T | E | E |
| R12 L - TL - GTL | 90-> | **4301 316 142 4301i 316 143** | comp. inc. | T | E | E | **4054 316 131** | | T | E | E |
| R18 1400 | <-84 | **4305i 316 145** | | T | E | E | **4046 316 129** | | T | E | E |
| R18 2000 Berlina y Break | <-84 | **4303i 316 144** | | T | E | E | **4046 316 129** | | T | E | E |
| R18 1400 - 2000 | 85-> | **4311i 316 147** | | T | E | E | **4046 316 129** | | T | E | E |
| R18 1600 | <-> | **4311i 316 147** | | T | E | E | **4046 316 129** | | T | E | E |
| R19 | <-6/99 | **4319G 316 150** | | MP | E | Br | **4060G 316 133** | | T | E | GM12/34 |
| R19 | 6/99-> | **4359G 316 156** | | MP | E | Br | **4060G 316 133** | | T | E | GM12/34 |
| R19 Coupe (importado) | 92-96 | **E4007** | ▼ | MP | E | Br | **4060G 316 133** | | T | E | GM12/34 |
| R21 - Alize - Nevada | <-> | **4321G 4323G** | ▼ | MP | E | Br | **4062G 316 134** | ▼ | T | GM12/40 | GM12/53 |
| Sandero | 08->10/13 | **315 236** | | MP | E | Br | **4010G 316 123** | | T | E | GM12/40 |
| Sandero II | 11/13-> | **316 926** | | MP | E | Br | **316 886** | | T | E | GM14/40 |
| Sandero Stepway | 09->14 | **315 328** | | MP | E | Br | **315 329** | | T | E | GM12/40 |
| Sandero Stepway II | 15-> | **317 251** | | MP | E | Br | **317 498** | | T | E | GM14/40 |
| Symbol | 08-> | **4381G 316 161** | | MP | E | Br | **4098G 316 863** | | T | E | GM12/40 |
| Torino / Rambler | 72-> | **4005** | ▼ | T | E | GM13/35 | **4002** | ▼ | T | E | E |
| Trafic Confort (carter largo, alt. plato 297,3 mm) | 86-> | **4317 316 149** | | C | E | - | **4056 316 132** | | T | E | GM14/32 |
| Trafic Standard (carter corto, alt. plato 277,3 mm) | 86-> | **4315 316 148** | | C | E | - | **4056 316 132** | | T | E | GM14/32 |
| Twingo | 94-> | **4337G 316 152** | | MP | E | Br | **4086G 316 139** | | T | E | GM12/40 |
| **ROVER** | | | | | | | | | | | |
| 214 - 216 - 220 | 90-95 | **170 920 170 921** | ▼ | MP | E | Bri | **8084G 316 282** | ▼ | T | E | H |
| 214 - 216 - 220 Sedan / 220 GSI Coupe | 99-> | **-** | | | | | **E24004G** | ▼ | T | E | GM12/52 |
| 25 (RF) | 00-> | **-** | | | | | **E24004G** | ▼ | T | E | GM12/52 |

| | | | | | | | | | | | |
|---|---|---|---|---|---|---|---|---|---|---|---|
| | | | | | Fijaciones | | | | | Fijaciones | |
| | | | Obs. | Sist. | Superior | Inferior | | Obs. | Sist. | Superior | Inferior |
| **ROVER** | | | | | | | | | | | |
| 414 - 416 - 420 Sedan y Rural | 90-04/95 | **E8319G 170 920 E8351G 170 921** | Izq. Der. | MP | E | Bri | **8084G** | | T | E | H |
| 416 - 420 Sedan | 05/95-> | **-** | | | | | **8084G 316 282** | | T | E | H |
| 416 - 420 Rural | 96-99 | **-** | | | | | **8084G 316 282** | | T | E | H |
| 45 Sedan | 00-> | **-** | | | | | **8084G 316 282** | | T | E | H |
| 620 - 623 | 93-> | **E19301G 200 884** | | MP | E | Bri | **E19002G 313 917** | | T | E | H |
| **SAAB** | | | | | | | | | | | |
| Serie 900 (excepto Cabriolet) | 93-> | **E28301G 312 278** | | C | E | - | **-** | | | | |
| Serie 9000 (todos) | 93-99 | **E28303G 312 324** | ▼ | MP | E | Br | **106 420 317 460** | | T | E | GM12/40 |
| 9-5 | 98-08/01 | **E28001G 553 680** | | MP | E | Br | **E28000G 312 708** | | T | E | GM15/59 |
| 9-5 Sport | 09/01-> | **E28007G 313 316** | | MP | E | Br | **E28000G 312 708** | | T | E | GM15/59 |
| **SEAT** | | | | | | | | | | | |
| Cordoba / Ibiza | 94-02 | **1327G 316 273** | | MP | E | Br | **1052G 316 014** | | T | E | GM10/50 |
| Inca 1.9D - 1.9SDI - 1.9TDI | 96-> | **1347G 316 272** | | MP | E | Br | **1040 311 427** | | T | GM12/32 | GM12/32 |
| León | 00-05 | **1353G 316 028** | | MP | E | Bri | **1064G 316 015** | | T | E | GM10/45 |
| León II | 09/05-> | **E1035G 312 267** | | MP | E | Bri | **E1034G 311 007** | | T | E | GM14/37 |
| Toledo | <-99 | **1327G 316 273** | | MP | E | Br | **1046G 316 012** | | T | E | GM10/50 |
| Toledo | 99-06 | **1353G 316 028** | | MP | E | Bri | **1064G 316 015** | | T | E | GM10/45 |
| **SSANGYONG** | | | | | | | | | | | |
| Musso 601-602 | 95-> | **30001/3 112 017** | | T | E | GM12/32 | **30002/3 170 847** | | T | E | G16/37 |
| Korando Family | 93-> | **30001/3 112 017** | | T | E | GM12/32 | **8002 316 227** | | T | G16/37 | G16/37 |
| New Korando | 98-> | **30001/3 112 017** | | T | E | GM12/32 | **30002/3 170 847** | | T | E | G16/37 |
| **SUBARU** | | | | | | | | | | | |
| Impreza 1.6 - 1.8 - 2.0 - 2.0GT 4WD Sedan / SW | 08/92-00 | **E27301G 280 813 E27303G 280 814** | ▼ | MP | E | Br | **E8322G E8324G** | ▼ | MP | E | Br |
| Legacy II 4WD / SW (excepto 2.5 4WD) | 94-03/99 | **E27301G 280 813 E27303G 280 814** | ▼ | MP | E | Br | **E27302G E27304G** | ▼ | MP | E | Br |

| | | | | | | | | | | | |
|---|---|---|---|---|---|---|---|---|---|---|---|
| | | | | | Fijaciones | | | | | Fijaciones | |
| | | | Obs. | Sist. | Superior | Inferior | | Obs. | Sist. | Superior | Inferior |
| **SUZUKI** | | | | | | | | | | | |
| Baleno Sedan y Wagon | 96-02 | **E25301G**<br>**280 428**<br>**E25303G**<br>**280 427** | Izq.<br>Der. | MP | E | Br | **200 335**<br>**317 199**<br>**200 334**<br>**317 200** | Izq.<br>Der. | MP | E | Br |
| Fun 1.0 | 03-> | **5307**<br>**316 358** | | MP | E | Br | **5074G**<br>**316 269** | | T | E | GM10/35 |
| Grand Vitara | 98-08/05 | **8375G**<br>**8345G** | ▼ | MP | E | Br | **8110G**<br>**317 669** | | T | E | GM12/38 |
| Grand Vitara (JIII) | 09/05-> | **313 455**<br>**317 185**<br>**313 456**<br>**317 186** | Izq.<br>Der. | MP | E | Br | **-** | | | | |
| Swift 1.5 | 07-> | **313 660**<br>**313 659** | Izq.<br>Der. | MP | E | Br | **313 663**<br>**316 927** | | T | E | GM16/32 |
| Vitara | 89-> | **8375G**<br>**8345G** | ▼ | MP | E | Br | **8110G**<br>**317 669** | | T | E | GM12/38 |
| **TOYOTA** | | | | | | | | | | | |
| Corolla | 92-01 | **8077G**<br>**316 242**<br>**8079G**<br>**316 244** | Izq.<br>Der. | MP | E | Br | **8078G**<br>**311 038**<br>**8092G**<br>**311 039** | Izq.<br>Der. | MP | E | Br |
| Corolla | 03-07 | **8105G**<br>**316 249**<br>**8103G**<br>**316 248** | Izq.<br>Der. | MP | E | Br | **8102G**<br>**316 247** | | T | E | GM22/40 |
| Corolla | 08-03/14 | **315 947**<br>**315 948** | Izq.<br>Der. | MP | E | Br | **315 949** | | T | E | GM22/40 |
| Corolla | 04/14-> | **317 331**<br>**317 332** | Izq.<br>Der.▲ | MP | E | Br | **315 949** | | T | E | GM22/40 |
| Etios | 06/13-> | **316 551** | | MP | E | Br | **316 552** | | T | E | GM12/42 |
| Hiace 4x2 (Furgon / Wagon) | 89-96 | **8045/3G**<br>**316 231** | | T | E | GM12/32 | **-** | | | | |
| Hilux 4x2 | 97-06/01 | **8067G**<br>**316 241** | | T | E | T9/62 | **8090G**<br>**316 246** | | T | G16/37 | G16/37 |
| Hilux 4x2 | 97-06/01 | **8067/3G**<br>**316 240** | | T | E | T9/62 | **8090/3G**<br>**316 245** | | T | G16/37 | G16/37 |
| Hilux 4x2 | 07/01-05 | **8061G**<br>**316 237** | | T | E | GM16/38 | **8108G**<br>**316 250** | | T | G19/41 | G19/41 |
| Hilux 4x2 | 07/01-05 | **8061/3G**<br>**316 236** | | T | E | GM16/38 | | | | | |
| Hilux 4x2 línea nueva | 05-> | **8119G**<br>**316 252** | | T | E | GM14/40 | **8108G**<br>**316 250** | | T | G19/41 | G19/41 |
| Hilux 4x4 | 97-05 | **8061G**<br>**316 237** | | T | E | GM16/38 | **8062G**<br>**316 238** | | T | G19/41 | G19/41 |
| Hilux 4x4 | 97-05 | **8061/3G**<br>**316 236** | | T | E | GM16/38 | **8062G**<br>**316 238** | | T | G19/41 | G19/41 |
| Hilux 4x4 con protector | 97-05 | **-** | | | | | **8062/8**<br>**314 707** | | T | G19/41 | G19/41 |
| Hilux 4x4 línea nueva | 05-> | **8119G**<br>**316 252** | | T | E | GM14/40 | **8108G**<br>**316 250** | | T | G19/41 | G19/41 |
| Hilux SW4 | 97-04 | **8155G**<br>**316 255** | | T | E | GM14/40 | **8156**<br>**316 256** | | T | E | G19/41 |
| Hilux SW4 línea nueva | 05-> | **8119G**<br>**316 252** | | T | E | GM14/40 | **8114G**<br>**316 251** | | T | E | G19/41 |
| Pick Up Hilux 2000 | <-86 | **8001**<br>**316 226** | | T | E | T8/60 | **8002**<br>**316 227** | | T | G16/37 | G16/37 |

| | | | | | | | | | | | |
|---|---|---|---|---|---|---|---|---|---|---|---|
| | | | | | Fijaciones | | | | | Fijaciones | |
| | | | Obs. | Sist. | Superior | Inferior | | Obs. | Sist. | Superior | Inferior |
| **TOYOTA** | | | | | | | | | | | |
| RAV 4 | 94-00 | **8393G** | ▼ | C | E | - | **8328G 316 274** | | T | E | GM16/38 |
| RAV 4 II | 01-06 | **E8097G 313 807 E8095G 313 806** | Izq. Der. | MP | E | Br | **8328G 316 274** | | T | E | GM16/38 |
| RAV 4 III | 07-12 | **314 846 314 845** | Izq. Der. | MP | E | Br | **314 863** | | T | GM12/45 | GM12/45 |
| **VOLKSWAGEN** | | | | | | | | | | | |
| 1500 1.8 y Rural | 81-> | **1305 316 023** | | C | E | - | **1016 316 005** | | T | E | G16/37 |
| Amarok | 09-> | **315 229** | | MP | E | H | **315 230** | | T | GM12/40 | GM12/40 |
| Bora 1.8T-1.9 TDI - 2.0 | 99-> | **1353G 316 028** | | MP | E | Bri | **1064G 316 015** | | T | E | GM10/45 |
| Caddy | 96-> | **1347G 316 272** | | MP | E | Br | **1040 311 427** | | T | GM12/32 | GM12/32 |
| Carat | <-92 | **3307G 316 108** | | C | E | - | **3060G 316 086** | | T | E | GM10/50 |
| Cross Fox | 05-> | **1307G 316 024** | | MP | E | Bri | **1094G 316 018** | | T | E | GM10/45 |
| Fox | 04-> | **1315G 312 594** | | MP | E | Bri | **1086G 316 280** | | T | E | GM10/45 |
| Gacel / Senda | <-> | **1313G 316 270** | | C | E | - | **1312 316 025** | | T | E | GM10/50 |
| Gol | <-95 | **1313G 316 270** | | C | E | - | **1318 316 026** | | T | E | GM10/50 |
| Gol | 95-> | **1313G 316 270** | | C | E | - | **1030G 316 271** | | T | E | GM10/50 |
| Gol Country | 97-> | **1313G 316 270** | | C | E | - | **1030G 316 271** | | T | E | GM10/50 |
| Gol Trend | 08-> | **1315G 312 594** | | MP | E | Bri | **1030G 316 271** | | T | E | GM10/50 |
| Golf III TDI (motor 1.9D) / GL (motor 1.8 Nafta) | 94-98 | **1327G 316 273** | | MP | E | Br | **1046G 316 012** | | T | E | GM10/50 |
| Golf III GLX - GTI (motor 2.0) | 95-98 | **1347G 316 272** | | MP | E | Br | **1046G 316 012** | | T | E | GM10/50 |
| Golf Evolution IV | 99-> | **1353G 316 028** | | MP | E | Bri | **1064G 316 015** | | T | E | GM10/45 |
| New Beetle | 99-> | **1353G 316 028** | | MP | E | Bri | **1064G 316 015** | | T | E | GM10/45 |
| Passat / Variant (trasero altura plato 323 mm) | 93-96 | **E1337 170 381** | | MP | E | Br | **E1054 105 781** | | T | E | GM12/50 |
| Passat / Variant (trasero altura plato 348 mm) | 93-96 | **E1337 170 381** | | MP | E | Br | **E1060G 170 930** | | T | E | GM12/50 |
| Passat VR6 | 93-96 | **170 130** | | MP | E | Br | **E1054 105 781** | | T | E | GM12/50 |
| Passat (3B2/B5) | 97-11/00 | **1345G 316 027** | | MP | E | H | **1068G 316 016** | | T | E | GM10/60 |
| Passat 4 motion (3B2/B5) | 97-11/00 | **1345G 316 027** | | MP | E | H | **E1078G 556 281** | | T | E | GM12/60 |
| Passat (3B2/B5) plato liso | 97-11/00 | **E1017G 557 837** | | MP | E | H | **1068G 316 016** | | T | E | GM10/60 |
| Passat (3B3/3B6) | 01-05/05 | **E1007G 290 186** | | MP | E | H | **1068G 316 016** | | T | E | GM10/60 |
| Passat (3B3/3B6) | 01-05/05 | **1007G 316 001** | | MP | E | H | **1068G 316 016** | | T | E | GM10/60 |

| | | | | | | | | | | | |
|---|---|---|---|---|---|---|---|---|---|---|---|
| | | | | | Fijaciones | | | | | Fijaciones | |
| | | | Obs. | Sist. | Superior | Inferior | | Obs. | Sist. | Superior | Inferior |
| **VOLKSWAGEN** | | | | | | | | | | | |
| Passat CC (Ø cárter 55 mm.) | 09-> | **E1021G 312 614** | | MP | E | Bri | **E1020G 311 346** | | T | E | GM14/37 |
| Passat nuevo (3C2/3C5) Ø cárter 55 mm. | 06/05-> | **E1021G 312 614** | | MP | E | Bri | **E1020G 311 346** | | T | E | GM14/37 |
| Pointer | <-> | **3311G 316 109** | | MP | E | Bri | **3064G 316 089** | | T | E | GM12/46 |
| Polo Classic | 96-> | **1347G 316 272** | | MP | E | Br | **1052G 316 014** | | T | E | GM10/50 |
| Quantum | <-> | **1313G 316 270** | | C | E | - | **1044G** | ⬇ | T | E | GM10/50 |
| Santana | 87-> | **1313G 316 270** | | C | E | - | **3060G 316 086** | | T | E | GM10/50 |
| Saveiro 1.6 - 1.8 | ->98 | **1313G 316 270** | | C | E | - | **1028 316 006** | | T | E | GM10/50 |
| Saveiro | 98-05 | **1313G 316 270** | | C | E | - | **1076 316 017** | | T | E | GM10/50 |
| Saveiro | 06-09 | **1313G 316 270** | | C | E | - | **1048G 316 013** | | T | E | GM10/50 |
| Saveiro New | 10-> | **315 378** | | MP | E | Bri | **315 379** | | T | E | GM10/45 |
| Sharan | 01-10 | **E1005G 200 419** | | MP | E | Bri | **E1006G 200 421** | | T | GM12/40 | GM14/40 |
| Sharan | 11-> | **314 883** | | MP | E | Bri | **400 019** | | T | E | GM14/37 |
| Scirocco | 12-> | **312 614** | | MP | E | Bri | **311 346** | | T | E | GM14/37 |
| Suran | 05-> | **1315G 312 594** | | MP | E | Bri | **1086G 316 280** | | T | E | GM10/45 |
| Transporter T4 | 96-> | **1025G 170 880** | | T | E | GM14/52 | **1056G 170 787** | | T | GM12/52 | E |
| Tiguan | 08-> | **312 643** | | MP | E | Bri | **313 253** | | T | E | GM14/37 |
| Up! | 14-> | **316 708** | | MP | E | Bri | **316 938** | | T | E | GM10/45 |
| Vento 2.0T / 2.5 (Ø carter 55 mm) | 06-04/11 | **E1021G 312 614** | | MP | E | Bri | **1008G 316 002** | | T | E | GM14/38 |
| Vento 1.9TD (Ø carter 50 mm) | 06-04/11 | **E1035G 312 267** | | MP | E | Bri | **1008G 316 002** | | T | E | GM14/38 |
| Vento 2.0 TFSi / 2.5 (Ø carter 55 mm) | 05/11-> | **E1021G 312 614** | | MP | E | Bri | **1008G 316 002** | | T | E | GM14/38 |
| Vento 2.0 TDI (Ø carter 50 mm) | 05/11-> | **E1035G 312 267** | | MP | E | Bri | **316 386** | | T | E | GM10/45 |
| Voyage | 08-> | **1315G 312 594** | | MP | E | Bri | **1030G 316 271** | | T | E | GM10/50 |
| **VOLVO** | | | | | | | | | | | |
| 240/260 Sedan y Rural | 74-08/93 | **E11001 100 261** | | C | E | - | **-** | | | | |
| 740/760/780 Sedan y Rural (excepto NIVOMAT) | 84-92 | **E11301G 100 662** | | C | E | - | **E11004G** | ⬇ | T | GM12/55 | GM12/55 |
| 850/850 Sports Wagon | 91-97 | **E11303 553 058** | | MP | E | Br | **E11002G 105 828** | | T | E | GM14/40 |
| 940 Sedan y Rural (excepto NIVOMAT) | 90-94 | **E11301G 100 662** | | C | E | - | **E11004G** | ⬇ | T | GM12/55 | GM12/55 |
| 940 II Sedan y Rural (excepto NIVOMAT) | 95-10/98 | **E11301G 100 662** | | C | E | - | **E11004G** | ⬇ | T | GM12/55 | GM12/55 |
| 960 Rural | 90-08/94 | **E11301G 100 662** | | C | E | - | **E11004G** | ⬇ | T | GM12/55 | GM12/55 |

| | | | | | | | | | | | |
|---|---|---|---|---|---|---|---|---|---|---|---|
| | | | | | Fijaciones | | | | | Fijaciones | |
| | | | Obs. | Sist. | Superior | Inferior | | Obs. | Sist. | Superior | Inferior |
| **VOLVO** | | | | | | | | | | | |
| C30 | 07-> | **E11005G 313 667 E11003G 313 665** | Izq. Der. | MP | E | Br | **313 669** | | T | E | GM12/36 |
| S40 / V40 Rural | 95-03 | **230 319 230 296 230 318 230 295** | Izq. Der. | MP | E | Br | **E11006G 230 322** | | T | E | GM12/47 |
| S40 II / V50 Rural | 04-> | **E11005G 313 667 E11003G 313 665** | Izq. Der. | MP | E | Br | **313 669** | | T | E | GM12/36 |
| S60 (excepto NIVOMAT) | 00-12/06 | **E11009G 554 046** | | MP | E | Br | **E11010G 315 854** | | T | E | GM12/74 |
| S60 II | 11-> | **313 748 313 749** | Izq. Der. | MP | E | Bri | **-** | | | | |
| S70 / C70 | 97-02 | **E11303 553 058** | | MP | E | Br | **E11002G 105 828** | | T | E | GM14/40 |
| S80 (excepto NIVOMAT) | 98-07/06 | **E11009G 554 046** | | MP | E | Br | **E11010G 315 854** | | T | E | GM12/74 |
| V70 I (excepto NIVOMAT) | 97-02/00 | **E11303 553 058** | | MP | E | Br | **E11002G 105 828** | | T | E | GM14/40 |
| V70 II (excepto NIVOMAT) | 03/00-> | **E11009G 554 046** | | MP | E | Br | **E11010G 315 854** | | T | E | GM12/74 |
| XC60 (excepto NIVOMAT) | 10-> | **314 720 314 721** | Izq. Der. | MP | E | Br | **-** | | | | |
| XC70 Cross Country (excepto NIVOMAT) | 00-> | **E11309G 554 041** | | MP | E | Br | **E11012G 311 753** | | T | E | GM20/48 |
| XC90 | 04-> | **314 125** | | MP | E | Br | **313 216 317 350** | | T | E | GM12/74 |

| Código viejo SACHS | Código nuevo SACHS | Marca | Aplicación | Año | Pos. | Código FRM | Código Corven | Código Monroe int. | Código Cofap | Código Nakata |
|---|---|---|---|---|---|---|---|---|---|---|
| **12305G** | **030 012** | Chrysler | Neón 1,8 - 2,0 | 94-2/98 | D | **71959** | **34343G** | **-** | **-** | **-** |
| **12300G** | **030 013** | Chrysler | Neón 1,8 - 2,0 | 94-2/98 | T | **71960** | **34364G** | **-** | **-** | **-** |
| **E12313G** | **030 645** | Chrysler | Caravan | 95-> | D | **71964** | **-** | **-** | **-** | **-** |
| **E11001** | **100 261** | Volvo | 240 / 260 / Kombi | 77-93 | D | **S3437** | **22225** | **-** | **-** | **-** |
| **E8405** | **100 274** | BMW | (E21) 315-316-318--320-320USA-323i | 75-82 | D | **-** | **-** | **-** | **-** | **-** |
| **E8403** | **100 456** | BMW | (E30) 316-318-320-323-324-325 Deport. (mangueta 51 mm) | 82-86 | D | **-** | **-** | **-** | **-** | **-** |
| **E8401G** | **100 457** | BMW | (E30) 316i-318i-320i-324d-325iX (mangueta 45 mm) | 82-92 | D | **-** | **-** | **-** | **-** | **-** |
| **E11301G** | **100 662** | Volvo | 740 - 760 - 780 / 940 - 960 (--96) | 84-92 | D | **MG251** | **22007G** | **-** | **3001G** | **-** |
| **E8336** | **101 532** | BMW | (E21) 315-316-318--320-320USA-323i | 75-82 | T | **-** | **-** | **-** | **-** | **-** |
| **-** | **101 945** | Mercedes Benz | 280/350 S/SE/SEL (W116) | 72-80 | D | **-** | **-** | **-** | **-** | **-** |
| **E14010G** | **105 750** | BMW | (E30) 316-318-320-324-325 / 323 Ti Compact (97-00) | 82-90 | T | **-** | **-** | **-** | **1114G** | **-** |
| **E1054** | **105 781** | VW | Passat / Variant | 93-96 | T | **E1016** | **44306** | **-** | **1424G** | **-** |
| **E11002G** | **105 828** | Volvo | 850 / 850 Sports Wagon / S-V-C70 (97--) | 91-96 | T | **-** | **42043** | **-** | **-** | **-** |
| **E28004G** | **106 420** | Saab | Serie 9000 (todos) | 93-99 | T | **-** | **-** | **-** | **-** | **-** |
| **-** | **110 638** | Renault | Express | ->96 | D | **44443MX** | **34696** | **44443MI** | **MP27277** | **-** |
| **30001/3** | **112 017** | SsangYong | Musso 601-602 / New Korando | 95-> | D | **D8486** | **42410** | **-** | **4801G** | **-** |
| **E6305G** | **115 069** | Mercedes Benz | 190D/E (Chasis 201)/ 200-220-230-280E/250D-300E/ Clase E | 89-96 | D | **-** | **35613G** | **-** | **-** | **-** |
| **E6303G** | **115 070** | Mercedes Benz | 190D/E (Chasis 201)/ 200-220-230-280E/250D-300E/ Clase E | 89-96 | D | **E4402** | **-** | **-** | **-** | **-** |
| **E14305G** | **115 372** | BMW | (E36) 316-318-318tds-320-323-325-325tds-328 Sedan/Coupe | 92-00 | DI | **S4467** | **34187G** | **-** | **GP32336** | **-** |
| **E14307G** | **115 373** | BMW | (E36) 316-318-318tds-320-323-325-325tds-328 Sedan/Coupe | 92-00 | DD | **S4467** | **34186G** | **-** | **GP32335** | **-** |
| **E6028G** | **124 393** | Mercedes Benz | Clase E | 96-> | T | **-** | **42633G** | **-** | **-** | **-** |
| **E1337** | **170 381** | VW | Passat / Variant | 93-96 | D | **E4479** | **34402** | **-** | **1451G** | **-** |
| **E6018G** | **170 451** | Mercedes Benz | C200-C220-C220D-C250D-C280 Deportivo | 93-05/00 | T | **E5027** | **42635G** | **-** | **2707G** | **-** |
| **1056G** | **170 787** | VW | Transporter T4 | 96-> | T | **V2077** | **62325** | **-** | **B47663** | **-** |
| **E1070G** | **170 815** | Audi | Audi A4 Avant | 95-99 | T | **E1088** | **44004G** | **-** | **-** | **-** |
| **E1072G** | **170 817** | Audi | Audi A4 Quattro | 95-> | T | **E2020** | **-** | **-** | **-** | **-** |
| **E14002G** | **170 823** | BMW | (E36) Compact 316i-318ti-318tds | 94-> | T | **E1115** | **-** | **-** | **-** | **-** |
| **30002/3** | **170 847** | SsangYong | Musso 601-602 / New Korando | 95-> | T | **D8481** | **42411** | **-** | **4802G** | **-** |
| **E14020G** | **170 855** | BMW | (E39) 520i-523i-525td-525tds-528i-530d | 9/95-99 | T | **E2040** | **64640G** | **-** | **1132G** | **-** |
| **1025G** | **170 880** | VW | Transporter T4 | 96-> | D | **V2065** | **62360** | **-** | **B47662** | **-** |
| **-** | **170 920** | Rover | 214-216-220 / 414-416-420 | 90-95 | DI | **E4411** | **-** | **-** | **-** | **-** |
| **-** | **170 921** | Rover | 214-216-220 / 414-416-420 | 90-95 | DD | **E4411** | **-** | **-** | **-** | **-** |
| **E1060G** | **170 930** | VW | VW Passat reforzado | ->96 | T | **-** | **-** | **-** | **-** | **-** |
| **E1005G** | **200 419** | VW | Sharan | 05-> | D | **E4562** | **-** | **-** | **-** | **-** |
| **E1006G** | **200 421** | VW | Sharan | 05-> | T | **E1286** | **-** | **-** | **-** | **-** |
| **4367G** | **200 476** | Renault | Megane Scenic (origen Francia) | 98-> | D | **S4366** | **-** | **-** | **-** | **-** |
| **E12301G** | **200 685** | Chrysler | Caravan | 86-95 | D | **71833** | **-** | **-** | **-** | **-** |
| **12000G** | **200 687** | Chrysler | Caravan Van | <-> | T | **37065** | **42994G** | **-** | **-** | **-** |
| **E7361G** | **200 846** | Peugeot | 406 / Break / Coupe / TD | 97-> | DI | **E4886** | **34500G** | **-** | **7037GL** | **HG78712i** |
| **E7363G** | **200 847** | Peugeot | 406 / Break / Coupe / TD | 97-> | DD | **E4886** | **34499G** | **-** | **7037GR** | **HG78713d** |
| **E19301G** | **200 884** | Honda | Accord / Coupe / Rover 414-416-420/ 620-623 (95--) | 90-96 | D | **71989** | **44036G** | **-** | **-** | **-** |

| Código viejo SACHS | Código nuevo SACHS | Marca | Aplicación | Año | Pos. | Código FRM | Código Corven | Código Monroe int. | Código Cofap | Código Nakata |
|---|---|---|---|---|---|---|---|---|---|---|
| **E8391G** | **230 016** | Honda | Civic / CRX / Coupe | 92-> | DD | **E1024** | **44020G** | **-** | **GB27365** | **-** |
| **E8427G** | **230 017** | Honda | Civic / CRX / Coupe | 92-> | DI | **E1024** | **44021G** | **-** | **GB27366** | **-** |
| **E22305G** | **230 130** | Mitsubishi | Colt / Lancer (mod. Nuevo) | 96-12/97 | DI | **E4444** | **34610G** | **-** | **-** | **-** |
| **E22307G** | **230 131** | Mitsubishi | Colt / Lancer (mod. Nuevo) | 96-12/97 | DD | **E4444** | **34611G** | **-** | **-** | **-** |
| **230 318** | **230 295** | Volvo | S40 / V40 | 95-03 | DD | **71483** | **34122G** | **-** | **3014GR** | **-** |
| **230 319** | **230 296** | Volvo | S40 / V40 | 95-03 | DI | **71484** | **34123G** | **-** | **3014GL** | **-** |
| **E11006G** | **230 322** | Volvo | S40 / V40 | 95-03 | T | **71356** | **-** | **-** | **3018G** | **-** |
| **E23015G** | **230 467** | Nissan | Pathfinder 4WD V6 | 09/97-> | DI | **95401MX** | **36055G** | **95401MI** | **-** | **-** |
| **E23017G** | **230 468** | Nissan | Pathfinder 4WD V6 | 09/97-> | DD | **95402MX** | **36054G** | **95402MI** | **-** | **-** |
| **E25303G** | **280 427** | Suzuki | Baleno / Baleno Wagon | 95-02 | DD | **-** | **34227G** | **-** | **-** | **-** |
| **E25301G** | **280 428** | Suzuki | Baleno / Baleno Wagon | 95-02 | DI | **-** | **34228G** | **-** | **-** | **-** |
| **-** | **280 435** | Peugeot | Expert Furgon | 99-06 | T | **V2510** | **-** | **-** | **-** | **-** |
| **E1014G** | **280 560** | Audi | A4 (8D2/ B5) espiga corta | 95-01 | T | **-** | **-** | **-** | **-** | **-** |
| **-** | **280 565** | Audi | A1 1.2 / 1.4 TFSI | 11-> | T | **E1309** | **-** | **-** | **-** | **-** |
| **E27301G** | **280 813** | Subaru | Impreza 1.6, 1.8, 2.0, 2.0GT 4WD / S.Wagon / Legacy II | 08/92-> | DI | **16480** | **34107G** | **-** | **-** | **-** |
| **E27303G** | **280 814** | Subaru | Impreza 1.6, 1.8, 2.0, 2.0GT 4WD / S.Wagon / Legacy II | 08/92-> | DD | **16479** | **34106G** | **-** | **-** | **-** |
| **2327G** | **280 975** | Fiat | Ducato/ Peugeot Boxer | 96-> | D | **95301MX** | **36460G** | **95301MI** | **GP52948** | **HG37002** |
| **E3090** | **290 042** | Ford | Mondeo Rural | ->96 | T | **E5308** | **-** | **-** | **-** | **-** |
| **E1007G** | **290 186** | VW | Passat | 01-> | D | **-** | **-** | **-** | **-** | **-** |
| **E1018G** | **290 187** | VW | Passat (3B3/ 3B6) reforzado | 01-05/05 | T | **-** | **-** | **-** | **-** | **-** |
| **E14029G** | **290 236** | BMW | Mini Cooper | 02-> | DI | **E7040** | **-** | **-** | **-** | **-** |
| **E14031G** | **290 237** | BMW | Mini Cooper | 02-> | DD | **E7040** | **-** | **-** | **-** | **-** |
| **E14009G** | **290 239** | BMW | X5 | 00-06 | DD | **D0407** | **36646G** | **-** | **-** | **-** |
| **E14011G** | **290 240** | BMW | X5 | 00-06 | DI | **D0407** | **36647G** | **-** | **-** | **-** |
| **290 740** | **290 739** | Renault | Laguna II | 01-08 | T | **E5097** | **-** | **-** | **-** | **-** |
| **E22301G** | **290 780** | Mitsubishi | Colt / Mirage / Lancer | 92-96 | DI | **E4249** | **-** | **-** | **-** | **-** |
| **E22303G** | **290 781** | Mitsubishi | Colt / Mirage / Lancer | 92-96 | DD | **E4249** | **-** | **-** | **-** | **-** |
| **E12011G** | **290 870** | Chrysler | PT Cruiser | 01-> | D | **95602MX** | **35543G** | **95602MI** | **-** | **-** |
| **-** | **300 153** | Chrysler | Neon II | 99-> | D | **95601MX** | **35560G** | **95601MI** | **-** | **-** |
| **-** | **300 154** | Chrysler | Neon II | 99-> | T | **95501MX** | **34561G** | **95501MI** | **-** | **-** |
| **E6039G** | **310 016** | Mercedes Benz | Vito / Viano | 96-> | D | **V4301** | **-** | **-** | **2729H** | **-** |
| **E24011G** | **310 021** | Land Rover | Freelander | 11/00-> | DD | **D0003** | **-** | **-** | **-** | **-** |
| **E24013G** | **310 022** | Land Rover | Freelander | 11/00-> | DI | **D0003** | **-** | **-** | **-** | **-** |
| **E24010G** | **310 023** | Land Rover | Freelander | 11/00-> | TD | **D0005** | **-** | **-** | **-** | **-** |
| **E24012G** | **310 024** | Land Rover | Freelander | 11/00-> | TI | **D0005** | **-** | **-** | **-** | **-** |
| **E14017G** | **310 051** | BMW | M3 (E46) | 00-> | DI | **-** | **-** | **-** | **-** | **-** |
| **E14019G** | **310 052** | BMW | M3 (E46) | 00-> | DD | **-** | **-** | **-** | **-** | **-** |
| **E12310G** | **310 174** | Chrysler | Stratus | 95-99 | T | **71282** | **34349G** | **-** | **-** | **-** |
| **-** | **310 202** | Chrysler | Caravan | 01-07 | D | **71572** | **-** | **-** | **-** | **-** |
| **E12311G** | **310 206** | Chrysler | Stratus | 95-99 | D | **71897** | **-** | **-** | **-** | **-** |
| **E14043G** | **310 273** | BMW | Serie 5 (E60) 525-530-540 | 03-> | DI | **-** | **-** | **-** | **-** | **-** |
| **E14045G** | **310 274** | BMW | Serie 5 (E60) 525-530-540 | 03-> | DD | **-** | **-** | **-** | **-** | **-** |
| **E14036G** | **310 275** | BMW | Serie 5 (E60) 520-25-30-35-40 | 03-> | T | **-** | **-** | **-** | **-** | **-** |
| **E14025G** | **310 718** | BMW | X3 | 04-> | DI | **D0405** | **62914G** | **-** | **-** | **-** |
| **E14027G** | **310 719** | BMW | X3 | 04-> | DD | **D0405** | **62914G** | **-** | **-** | **-** |
| **E14032G** | **310 720** | BMW | X3 | 04-> | T | **D4005** | **-** | **-** | **-** | **-** |
| **-** | **310 764** | Peugeot | Expert Furgon | 99-06 | DD | **V4201** | **-** | **-** | **-** | **-** |
| **-** | **310 765** | Peugeot | Expert Furgon | 99-06 | DI | **V4201** | **-** | **-** | **-** | **-** |
| **E14021G** | **310 982** | BMW | BMW serie 1 | 05-> | DI | **E7072** | **-** | **-** | **-** | **-** |
| **E14023G** | **310 983** | BMW | BMW serie 1 | 05-> | DD | **E7072** | **-** | **-** | **-** | **-** |

| Código viejo SACHS | Código nuevo SACHS | Marca | Aplicación | Año | Pos. | Código FRM | Código Corven | Código Monroe int. | Código Cofap | Código Nakata |
|---|---|---|---|---|---|---|---|---|---|---|
| **E14028G** | **310 984** | BMW | BMW serie 1 | 05-> | T | **E2068** | **-** | **-** | **-** | **-** |
| **E1034G** | **311 007** | Audi | A3 / Seat León | 03-> | T | **E1336** | **42552G** | **-** | **-** | **-** |
| **E1027G** | **311 017** | Audi | A4 (8EC/D) | 05-> | D | **-** | **64901G** | **-** | **-** | **-** |
| **8078G** | **311 038** | Toyota | Corolla | 92-01 | TI | **16270** | **34373G** | **-** | **GP32578** | **-** |
| **8092G** | **311 039** | Toyota | Corolla | 92-01 | TD | **16269** | **34374G** | **-** | **GP32577** | **-** |
| **-** | **311 233** | BMW | X5 30d-35i-50i | 05/00-06 | T | **39051** | **-** | **-** | **-** | **-** |
| **E1020G** | **311 346** | VW | Passat nuevo (3C2/ 3C5) | 06/05-> | T | **G2101** | **-** | **-** | **-** | **-** |
| **E14037G** | **311 403** | BMW | (E90) 316i-318i-320i/d-323i-325i-330i/d-335i | 05-> | DI | **E7072** | **-** | **-** | **-** | **-** |
| **E14039G** | **311 404** | BMW | (E90) 316i-318i-320i/d-323i-325i-330i/d-335i | 05-> | DD | **E7072** | **-** | **-** | **-** | **-** |
| **1040** | **311 427** | VW | Caddy/ Seat Inca 1.9D, 1.9SDI, 1.9TDI | 96-> | T | **38055MX** | **42387** | **38055MI** | **B48029** | **AC30916** |
| **-** | **311 645** | Mercedes Benz | Viano nva. | 08/03-> | D | **-** | **-** | **-** | **-** | **-** |
| **E11012G** | **311 753** | Volvo | Volvo XC70 (exc.Nivomat) | 00-> | T | **-** | **-** | **-** | **-** | **-** |
| **-** | **311 995** | Mercedes Benz | Clase M (Chasis 163) | 99-06 | T | **-** | **-** | **-** | **-** | **-** |
| **E2335G** | **312 050** | Alfa Romeo | 145/146 TD / 155 1.9 TD - 1.8 y 2,0 nafta | 94-> | D | **E4555** | **34144G** | **-** | **GP32212** | **-** |
| **E14317G** | **312 069** | BMW | (E36) 323 Ti Compact | 97-08/00 | DI | **-** | **-** | **-** | **-** | **-** |
| **E14319G** | **312 070** | BMW | (E36) 323 Ti Compact | 97-08/00 | DD | **-** | **-** | **-** | **-** | **-** |
| **E14005G** | **312 252** | BMW | M3 (E36) | 95-99 | DD | **-** | **-** | **-** | **-** | **-** |
| **E14007G** | **312 253** | BMW | M3 (E36) | 95-99 | DI | **-** | **-** | **-** | **-** | **-** |
| **E14041G** | **312 255** | BMW | (E34) 518i-520i | 88-90 | D | **-** | **-** | **-** | **-** | **-** |
| **E1035G** | **312 267** | Audi | A3 / Seat León | 03-> | D | **E7056** | **35551G** | **-** | **-** | **-** |
| **E2020G** | **312 274** | Alfa Romeo | 145 Q 2,0 - 1,8 / 146 Ti 2,0 - 1,8/ 145/146 TD | 96-> | T | **E5038** | **-** | **-** | **GL12487** | **-** |
| **E28301G** | **312 278** | Saab | Serie 900 (excepto Cabriolet) | 93-> | D | **-** | **22102G** | **-** | **-** | **-** |
| **E3329** | **312 289** | Ford | Mondeo Sedan / Rural | ->96 | D | **E4486** | **34058G** | **-** | **GP32340** | **-** |
| **E3096** | **312 305** | Ford | Mondeo | ->96 | T | **E4493** | **34067G** | **-** | **GP32341** | **-** |
| **E28303G** | **312 324** | Saab | Serie 9000 (todos) | 93-99 | D | **-** | **-** | **-** | **-** | **-** |
| **E3331G** | **312 330** | Ford | Mondeo Sedan / Rural | 96-12/00 | D | **E4585** | **34060G** | **-** | **GP32583** | **-** |
| **E3092G** | **312 339** | Ford | Mondeo | 96-> | T | **E4493** | **34067G** | **-** | **-** | **-** |
| **E28005G** | **312 349** | Saab | 9-3 | 98-> | D | **-** | **-** | **-** | **-** | **-** |
| **E14309G** | **312 385** | BMW | (E34) 518i-520i-524td-525i-530i-535i Deport. | 88-90 | D | **-** | **22013G** | **-** | **-** | **-** |
| **E14015G** | **312 393** | BMW | (E34) 520-524td-525i-tds-530i-530 V8-535i-540 V8 | 90-95 | D | **-** | **23646G** | **-** | **-** | **-** |
| **1315G** | **312 594** | VW | Fox | 04-> | D | **94178MX** | **35545G** | **94178MI** | **GP32476** | **HG33036** |
| **E1021G** | **312 614** | VW | Passat nuevo (3C2/ 3C5) / Vento | 06/05-> | D | **E7057** | **36395G** | **-** | **-** | **HG78991** |
| **E1061G** | **312 638** | Audi | Audi A6 | 05-> | D | **E2070** | **64902G** | **-** | **-** | **-** |
| **E1066G** | **312 640** | Audi | Audi A6 | 05-> | T | **E7805** | **-** | **-** | **-** | **-** |
| **-** | **312 643** | VW | Tiguan / Audi TT 1.8 - 2.0 - Quattro | 08-> | D | **-** | **-** | **-** | **-** | **-** |
| **E8313G** | **312 675** | Mazda | 323 | 94-08/98 | DD | **11230** | **34491G** | **-** | **-** | **-** |
| **E8311G** | **312 676** | Mazda | 323 | 94-08/98 | DI | **11231** | **34490G** | **-** | **-** | **-** |
| **E28000G** | **312 708** | Saab | 9-5 | 98-> | T | **-** | **-** | **-** | **-** | **-** |
| **E1022G** | **312 783** | Audi | A4 (8E2/ B6) | 01-12/04 | T | **71332** | **-** | **-** | **-** | **-** |
| **E3001G** | **312 937** | Ford | Mondeo | 01-02/07 | D | **E4971** | **35748G** | **-** | **2514G** | **-** |
| **E3002G** | **312 939** | Ford | Mondeo | 01-02/07 | T | **E4972** | **35749G** | **-** | **2515G** | **-** |
| **-** | **312 984** | Jeep | Compass / Patriot | 07-> | DD | **72367** | **-** | **-** | **-** | **-** |
| **-** | **312 985** | Jeep | Compass / Patriot | 07-> | DI | **72368** | **-** | **-** | **-** | **-** |
| **E6021G** | **313 200** | Mercedes Benz | Clase C 180-200-220-280-320-350 (Chasis 204) | 01/07-> | D | **E4654** | **-** | **-** | **-** | **-** |
| **-** | **313 237** | Nissan | Sentra 2.0 | 10-13 | DD | **-** | **-** | **-** | **-** | **-** |
| **-** | **313 238** | Nissan | Sentra 2.0 | 10-13 | DI | **-** | **-** | **-** | **-** | **-** |

| Código viejo SACHS | Código nuevo SACHS | Marca | Aplicación | Año | Pos. | Código FRM | Código Corven | Código Monroe int. | Código Cofap | Código Nakata |
|---|---|---|---|---|---|---|---|---|---|---|
| - | 313 253 | VW | Tiguan | 08-> | T | - | 42227G | - | - | - |
| - | 313 263 | Jeep | Grand Cherokee | 05-11 | D | 71377 | - | - | - | - |
| 313 285 | 313 283 | Ford | Focus II | 08-> | DI | 95603MX | 35872G | 95603MI | GP32582 | HG33070i |
| 313 289 | 313 287 | Ford | Focus II | 08-> | DD | 95604MX | 35871G | 95604MI | GP32581 | HG33069d |
| E28007G | 313 316 | Saab | 9-5 | 09/01-> | D | - | - | - | - | - |
| - | 313 364 | Audi | A4 | 08-> | D | - | - | - | - | - |
| - | 313 366 | Audi | A4 | 08-> | T | - | - | - | - | - |
| E1036G | 313 367 | Audi | A4 (8EC/D) | 05-> | T | - | 62908G | - | - | - |
| - | 313 370 | Audi | TT 1.8 / 2.0 / 3.2 Quattro | 07-> | T | - | - | - | - | - |
| E8297G | 313 401 | Mazda | 323 | 09/98-01 | DD | - | 34510G | - | - | - |
| E8299G | 313 402 | Mazda | 323 | 09/98-01 | DI | - | 34511G | - | - | - |
| - | 313 500 | Ford | Transit | 11/10-> | D | - | - | - | - | - |
| 3326G | 313 505 | Ford | Transit modelo nuevo | 01-> | T | 83800MX | 42122G | 83800MI | 2520H | - |
| - | 313 505 | Ford | Transit modelo nuevo | 01-> | T | V2510 | 62912G | - | - | - |
| 400 062 | 313 562 | Peugeot | 407 | 04-> | D | E2062 | 64903G | - | - | - |
| 400 063 | 313 564 | Peugeot | 407 | 04-> | T | E2064 | 64904G | - | - | - |
| 400 075 | 313 577 | Renault | Laguna II | 01-08 | D | E4760 | - | - | - | - |
| E8296G | 313 626 | Mazda | 323 | 09/98-01 | TD | - | 35512G | - | - | - |
| E8298G | 313 627 | Mazda | 323 | 09/98-01 | TI | - | 35513G | - | - | - |
| - | 313 659 | Suzuki | Swift III 1.5 | 07-> | DD | G7273 | 34908G | - | - | - |
| - | 313 660 | Suzuki | Swift III 1.5 | 07-> | DI | G7274 | 34909G | - | - | - |
| E11003G | 313 665 | Volvo | Volvo S40 II / V50 | 04-> | DD | - | - | - | - | - |
| E11005G | 313 667 | Volvo | Volvo S40 II / V50 | 04-> | DI | - | - | - | - | - |
| - | 313 669 | Volvo | S40 II / V50 / C30 | 04-> | T | - | - | - | - | - |
| - | 313 679 | Peugeot | 207 CC / GTI | 08-> | DI | E7086 | HT35287 | - | - | - |
| - | 313 681 | Peugeot | 207 CC / GTI | 08-> | DD | E7086 | HT35286 | - | - | - |
| - | 313 683 | Peugeot | 207 CC / GTI | 08-> | T | E7806 | HT42288 | - | - | - |
| - | 313 740 | BMW | Mini Cooper One / S / D | 07-> | T | E1363 | - | - | - | - |
| - | 313 748 | Ford | Mondeo | 09/07-> | DI | - | - | - | - | - |
| - | 313 749 | Ford | Mondeo | 09/07-> | DD | - | - | - | - | - |
| - | 313 754 | Ford | FORD - Mondeo - Trasero - (07->) | 07-> | T | - | - | - | - | - |
| - | 313 769 | Honda | CR-V II | 02-06 | T | 71380 | 44298G | - | - | - |
| E8095G | 313 806 | Toyota | RAV 4 II | 01-05 | DD | D0011 | 35172G | - | - | - |
| E8097G | 313 807 | Toyota | RAV 4 II | 01-05 | DI | D0011 | 35175G | - | - | - |
| - | 313 881 | Mitsubishi | Outlander / Outlander Sport | 07/05-> | DD | - | - | - | - | - |
| - | 313 882 | Mitsubishi | Outlander / Outlander Sport | 07/05-> | DI | - | - | - | - | - |
| - | 313 901 | Nissan | Tiida | 08-> | DI | 72352 | 34683G | - | - | - |
| - | 313 902 | Nissan | Tiida | 08-> | DD | 72351 | 34684G | - | - | - |
| 2026 | 313 906 | Fiat | Tipo 1.6 - 2.0 / Tempra (Europa) | 88-> | T | 84725MX | 42237G | 84725MI | GL12331 | - |
| E19002G | 313 917 | Honda | Accord / Coupe/ Rover 620-623 (93--) | 90-96 | T | 71286 | 44025G | - | - | - |
| - | 313 925 | Alfa Romeo | Mito | 09-> | DI | G8113 | - | - | - | - |
| - | 313 926 | Alfa Romeo | Mito | 09-> | DD | G8112 | - | - | - | - |
| - | 313 929 | BMW | X1 sdrive | 10-> | DI | - | - | - | - | - |
| - | 313 930 | BMW | X1 sdrive | 10-> | DD | - | - | - | - | - |
| - | 313 931 | BMW | X1 xdrive | 10-> | DI | - | - | - | - | - |
| - | 313 932 | BMW | X1 xdrive | 10-> | DD | - | - | - | - | - |
| - | 313 933 | BMW | X1 xdrive / sdrive | 10-> | T | - | - | - | - | - |
| - | 313 962 | Alfa Romeo | Mito | 09-> | T | G1091 | - | - | - | - |
| - | 314 006 | Mercedes Benz | GLK | 09-> | D | - | - | - | - | - |
| - | 314 012 | Kia | Sportage | 05-10 | DD | 72219 | - | - | - | - |
| - | 314 013 | Kia | Sportage | 05-10 | DI | 72220 | - | - | - | - |

| Código viejo SACHS | Código nuevo SACHS | Marca | Aplicación | Año | Pos. | Código FRM | Código Corven | Código Monroe int. | Código Cofap | Código Nakata |
|---|---|---|---|---|---|---|---|---|---|---|
| - | 314 014 | Kia | Sportage | 05-10 | TD | 72221 | - | - | - | - |
| - | 314 015 | Kia | Sportage | 05-10 | TI | 72222 | - | - | - | - |
| 19015G | 314 028 | Honda | Fit | 05-> | DI | 94186MX | 34727G | 94186MI | GP35968 | HG31118i |
| 19017G | 314 029 | Honda | Fit | 05-> | DD | 94185MX | 34726G | 94185MI | GP35967 | HG31117d |
| - | 314 032 | Peugeot | Expert Furgon | 08-13 | DI | - | 35477G | - | - | - |
| - | 314 033 | Peugeot | Expert Furgon | 08-13 | DD | - | 35476G | - | - | - |
| - | 314 042 | Renault | Koleos / Nissan X Trail | 07-> | DD | D0019 | 35916G | - | - | - |
| - | 314 043 | Renault | Koleos / Nissan X Trail | 07-> | DI | D0019 | 35917G | - | - | - |
| - | 314 044 | Renault | Koleos / Nissan X Trail | 07-> | T | D0021 | 42223G | - | - | - |
| - | 314 049 | Ford | Transit | 11/10-> | T | - | - | - | - | - |
| - | 314 125 | Volvo | XC90 | 08-> | D | - | - | - | - | - |
| E2361G | 314 133 | Fiat | Marea / Weekend 1.6 Nafta - 1.9 TD | 98-> | D | 94179MX | 34747G | - | GP32373 | HG33020 |
| - | 314 213 | Audi | Q5 | 09-> | T | E7811 | - | - | - | - |
| - | 314 215 | Chery | QQ | 10-> | DD | - | 34252G | - | - | - |
| - | 314 216 | Chery | QQ | 10-> | DI | - | 34253G | - | - | - |
| - | 314 421 | Mercedes Benz | Sprinter NCV3 3.8 Tn. | 12-> | D | 95207 | 36473G | - | - | - |
| - | 314 422 | Mercedes Benz | Sprinter NCV3 5.0 Tn. | 12-> | D | 95208 | - | - | - | - |
| - | 314 455 | Audi | Q7 | 06-> | DI | D0301 | 34791G | - | - | - |
| - | 314 456 | Audi | Q7 | 06-> | DD | D0301 | 34790G | - | - | - |
| - | 314 457 | Audi | Q7 | 06-> | T | D8071 | 64792G | - | - | - |
| 2001G | 314 626 | Fiat | Stilo | 03-> | D | 94195MX | 35393G | SP072 | GP32436 | HG33022 |
| - | 314 663 | Peugeot | Expert Furgon | 08-13 | T | - | 62484G | - | - | - |
| 3023/4 | 314 683 | Ford | Pick Up F 250 / F350 T.I.B./ F400 | 67-> | D | 65317 | - | - | - | - |
| - | 314 695 | Kia | Soul 1.6 | 09->14 | DI | - | 34778G | - | - | - |
| - | 314 696 | Kia | Soul 1.6 | 09->14 | DD | - | 34777G | - | - | - |
| 3017/4 | 314 700 | Ford | Pick Up F 100 T.I.B. | 66-9/92 | D | 65305 | - | - | - | - |
| 3059/4 | 314 701 | Ford | F100 / F150 / F1000 | 4/92-> | D | 65326 | - | - | - | - |
| 3062/4 | 314 702 | Ford | F100 / F150 / F1000 | 4/92-> | T | 65327 | - | - | - | - |
| 3062/8 | 314 703 | Ford | F100 / F150 / F1000 c/protector | 4/92-> | T | - | 68064 | - | - | - |
| 3103/4 | 314 704 | Ford | F100 | 99-> | D | 65339 | 62545 | - | - | - |
| 3104/4 | 314 705 | Ford | F100 | 99-> | T | 65340 | 62546 | - | - | - |
| 3106/8 | 314 706 | Ford | Ranger 4x2 / 4x4 c/protector | 96-> | T | - | 68427 | - | - | - |
| 8062/8 | 314 707 | Toyota | Hilux 4x4 c/protector | 97-> | T | 65338 | 68420 | - | - | - |
| - | 314 717 | Audi | A1 1.2 / 1.4 TFSI | 11-> | D | - | - | - | - | - |
| - | 314 720 | Volvo | XC60 | 10-> | DI | - | 35785G | - | - | - |
| - | 314 721 | Volvo | XC60 | 10-> | DD | - | 35784G | - | - | - |
| 2004G | 314 753 | Fiat | Stilo | 03-> | T | 83823MX | 42289G | SP074 | GB47886 | HG31122 |
| - | 314 766 | GMC | Aveo | 08-> | DI | R7214 | 34891G | - | - | - |
| - | 314 767 | GMC | Aveo | 08-> | DD | R7213 | 34890G | - | - | - |
| - | 314 839 | Fiat | 500 / 500C | 11-> | DI | G7306 | - | - | - | - |
| - | 314 843 | Fiat | 500 / 500C | 11-> | T | G1083 | - | - | - | - |
| - | 314 845 | Toyota | RAV 4 | 06-12 | DD | 72275 | 35238G | - | - | - |
| - | 314 846 | Toyota | RAV 4 | 06-12 | DI | 72276 | 35239G | - | - | - |
| - | 314 849 | Peugeot | 508 | 12-> | T | - | - | - | - | - |
| - | 314 860 | Ford | Ka línea nueva | 08-> | D | 94196MX | 34656G | 94196MI | GP35950M | HG33032 |
| - | 314 863 | Toyota | RAV 4 | 06-12 | T | 37289 | 42240G | - | - | - |
| - | 314 878 | BMW | X3 | 03/12-> | DI | - | - | - | - | - |
| - | 314 879 | BMW | X3 | 03/12-> | DD | - | - | - | - | - |
| - | 314 883 | VW | Sharan | 11-> | D | - | - | - | - | - |
| - | 314 892 | Hyundai | H1 | 08-> | DI | - | - | - | - | - |
| - | 314 893 | Hyundai | H1 | 08-> | DD | - | - | - | - | - |
| - | 314 898 | Renault | Megane II | 05-> | D | E4750 | 34429G | - | GP30233 | - |

| Código viejo SACHS | Código nuevo SACHS | Marca | Aplicación | Año | Pos. | Código FRM | Código Corven | Código Monroe int. | Código Cofap | Código Nakata |
|---|---|---|---|---|---|---|---|---|---|---|
| E2353G | 314 906 | Alfa Romeo | 156 2,0 - JTD - V6 - 2,5V6 24V | 09/97-> | D | E5091 | 42907G | - | 5795G | - |
| - | 314 994 | Hyundai | Tucson | 07-10 | DI | 72220 | 35839G | - | - | - |
| - | 314 995 | Hyundai | Tucson | 07-10 | DD | 72219 | 35838G | - | - | - |
| - | 314 996 | Hyundai | Tucson | 07-10 | TI | 72222 | 35841G | - | - | - |
| - | 314 997 | Hyundai | Tucson | 07-10 | TD | 72221 | 35840G | - | - | - |
| - | 314 998 | GM | Spark 1.0 | 08-> | DI | OYA24002 | 34171G | - | - | - |
| - | 314 999 | GM | Spark 1.0 | 08-> | DD | OYA24001 | 34170G | - | - | - |
| - | 315 091 | Audi | Q3 | 10/12-> | D | - | 36201G | - | - | - |
| - | 315 125 | Fiat | Qubo Active / Dynamic / Fiorino Qubo | 12-> | DI | G8108 | 35392G | - | - | - |
| - | 315 126 | Fiat | Qubo Active / Dynamic / Fiorino Qubo | 12-> | DD | G8107 | 35391G | - | - | - |
| - | 315 132 | Fiat | Qubo Active / Dynamic / Fiorino Qubo | 12-> | T | G1090 | 62393G | - | - | - |
| - | 315 139 | Peugeot | 308 CC | 10-> | T | G2217 | - | - | - | - |
| 6467/6 | 315 190 | Mercedes Benz | OF 1618-20 susp. elástica / OF-OH 1313/15/18 | <-> | D | - | - | - | - | - |
| - | 315 220 | Hyundai | i10 / Kia Picanto | 10-> | DI | G7024 | - | - | - | - |
| - | 315 221 | Hyundai | i10 / Kia Picanto | 10-> | DD | G7023 | - | - | - | - |
| - | 315 223 | GMC | Agile | 09-> | D | 94201MX | 34709G | 94201MI | GP30315 | HG33042 |
| - | 315 224 | GMC | Agile | 09-> | T | 83839MX | 42710G | 83839MI | GB48043 | HG31151 |
| - | 315 225 | Honda | Civic | 06-11 | DI | 72287 | 34751G | - | GP35983 | HG31139i |
| - | 315 226 | Honda | Civic | 06-11 | DD | 72286 | 34750G | - | GP35984 | HG31138d |
| - | 315 227 | Honda | Civic | 06-11 | T | 83817MX | 42212G | - | GB29982M | HG31140 |
| - | 315 228 | Ford | Focus II | 08-> | T | 83825MX | 42873G | 83825MI | - | HG31200 |
| - | 315 229 | VW | Amarok | 09-> | D | 84751MX | 34459G | 84751MI | GL13685 | HG36081 |
| - | 315 230 | VW | Amarok | 09-> | T | 83833MX | 62460G | 83833MI | - | HG31201 |
| - | 315 231 | Peugeot | 308 / 408 | 11-> | DI | G7330 | HT34070 | - | - | HG33072i |
| - | 315 232 | Peugeot | 308 / 408 | 11-> | DD | G7329 | HT34069 | - | - | HG33071d |
| - | 315 233 | Peugeot | 308 / 408 | 11-> | T | 83797MX | HT42071 | - | - | HG36082 |
| - | 315 236 | Renault | Logan / Sandero | 08-> | D | G7203 | 34654G | 94203MI | GP30314 | HG33037 |
| - | 315 267 | Mercedes Benz | Clase A (W176) / Clase B (W246) | 05/13-> | DI | - | - | - | - | - |
| - | 315 268 | Mercedes Benz | Clase A (W176) / Clase B (W246) | 05/13-> | DD | - | - | - | - | - |
| - | 315 269 | Mercedes Benz | Clase A (W176) / Clase B (W246) | 05/13-> | T | - | - | - | - | - |
| - | 315 288 | Fiat | Strada Adventure / Palio Adventure Locker | 08-> | D | 94176MX | 34875G | 94176MI | GP30352 | HG33004 |
| - | 315 289 | Fiat | Strada Adventure | 08-> | T | 84747MX | 42439 | - | GL13136 | - |
| - | 315 293 | Mercedes Benz | Clase B | 05-11 | D | E7093 | - | - | - | - |
| - | 315 306 | Hyundai | Santa Fe I | 01-06 | DI | 71436 | 35595G | - | - | - |
| - | 315 307 | Hyundai | Santa Fe I | 01-06 | DD | 71435 | 35594G | - | - | - |
| - | 315 312 | BMW | X5 / X6 30d-35i | 07-> | D | - | - | - | - | - |
| - | 315 315 | BMW | X5 / X6 30d-35i | 07-> | TI | - | - | - | - | - |
| - | 315 316 | BMW | X5 / X6 30d-35i | 07-> | TD | - | - | - | - | - |
| - | 315 317 | Fiat | Idea Adventure | 11-> | D | 94200MX | 34694G | 94200MI | GP30224 | - |
| - | 315 318 | Fiat | Idea Adventure | 11-> | T | 83836MX | 42695G | 83836MI | GB47965 | HG31134 |
| - | 315 328 | Renault | Sandero Stepway | 09-> | D | 94204MX | 34046G | 94204MI | GP30318 | HG33061 |
| - | 315 329 | Renault | Sandero Stepway | 09-> | T | 83840MX | 42047G | 83840MI | GB48033 | HG31183 |
| - | 315 372 | Fiat | Dobló Active / Cargo | 10/12-> | DI | - | - | - | - | - |
| - | 315 373 | Fiat | Dobló Active / Cargo | 10/12-> | DD | - | - | - | - | - |
| - | 315 378 | VW | Saveiro | 10-> | D | 94205MX | 35001G | - | GP32801 | - |
| - | 315 379 | VW | Saveiro | 10-> | T | 83842MX | 42002G | 83842MI | GB48084 | - |
| - | 315 380 | Honda | City | 11-> | DI | - | 34878G | - | - | HG31194i |
| - | 315 381 | Honda | City | 11-> | DD | - | 34877G | - | - | HG31193d |
| - | 315 382 | Honda | City | 11-> | T | 83831MX | 42879G | 83831MI | - | HG31195 |

| Código viejo SACHS | Código nuevo SACHS | Marca | Aplicación | Año | Pos. | Código FRM | Código Corven | Código Monroe int. | Código Cofap | Código Nakata |
|---|---|---|---|---|---|---|---|---|---|---|
| - | 315 383 | GMC | Montana | 10-> | T | 83852MX | 42079G | - | GBL1189 | HG31176 |
| - | 315 384 | Fiat | Punto / Línea | 05-> | DI | E7068 | 35864G | - | - | HG33046i |
| - | 315 385 | Fiat | Punto / Línea | 05-> | DD | E7068 | 35863G | - | - | HG33045d |
| - | 315 386 | Fiat | Uno / Palio / Grand Siena | 11-> | DI | 94212MX | 34832G | 94212MI | GP32826 | HG33074i |
| - | 315 387 | Fiat | Uno / Palio / Grand Siena | 11-> | DD | 94213MX | 34831G | 94213MI | GP32827 | HG33073d |
| - | 315 388 | Fiat | Uno / Palio | 11-> | T | 83850MX | 42833G | 83850MI | GB48091 | HG31208 |
| - | 315 441 | Citroën | DS3 | 12/10-> | DI | - | HT35018 | - | - | - |
| - | 315 442 | Citroën | DS3 | 12/10-> | DD | - | HT35017 | - | - | - |
| - | 315 454 | Citroën | DS3 | 12/10-> | T | E7806 | HT42288 | - | - | - |
| - | 315 463 | Fiat | Dobló Active / Cargo | 10/12-> | T | - | 62476G | - | - | - |
| - | 315 464 | Fiat | 500 / 500C | 11-> | DD | G7305 | - | - | - | - |
| - | 315 465 | Mercedes Benz | Sprinter NCV3 5.0 Tn. | 12-> | T | 83849 | - | - | - | - |
| - | 315 466 | Mercedes Benz | Sprinter NCV3 3.8 Tn. | 12-> | T | 83848 | - | - | - | - |
| - | 315 467 | Ford | Ranger 4x2 / 4x4 | 12-> | D | 84754MX | 64155G | 84754MI | GL13683 | - |
| - | 315 468 | Ford | Ranger 4x2 / 4x4 | 12-> | T | 84753MX | 62285G | 84753MI | - | - |
| - | 315 477 | GMC | Cruze | 11-> | DI | G8196 | HT35029 | - | GP32959 | - |
| - | 315 478 | GMC | Cruze | 11-> | DD | G8195 | HT35028 | - | GP32960 | - |
| - | 315 482 | GMC | Cruze | 11-> | T | 83844MX | HT42030 | 83844MI | - | - |
| 5012G | 315 525 | GMC | Aveo | 08-> | T | 5794 | 42892G | - | - | - |
| - | 315 526 | Mercedes Benz | Clase M (W164) | 11/07-> | D | - | - | - | - | - |
| - | 315 533 | Nissan | Tiida | 08-> | T | 83846MX | 42689G | 83846MI | - | - |
| - | 315 562 | GMC | S-10 Pick Up | 03/12-> | D | 84756MX | 64152G | - | GL13703 | - |
| - | 315 563 | GMC | S-10 Pick Up | 03/12-> | T | 84755MX | 62153G | 84755MI | - | - |
| - | 315 564 | Ford | Fiesta Kinetic | 11-> | T | 83843MX | 42806G | 83843MI | - | - |
| - | 315 565 | Renault | Duster 4x2 | 11-> | T | G1153 | 42279G | - | - | - |
| 311 647 | 315 572 | Mercedes Benz | Viano nva. | 08/03-> | T | - | - | - | - | - |
| - | 315 641 | Dodge | Journey | 08-> | DI | 72510 | 35217G | - | - | - |
| - | 315 642 | Dodge | Journey | 08-> | DD | 72509 | 35216G | - | - | - |
| 6301G | 315 700 | Mercedes Benz | Sprinter Kombi/ Pick up y furgon | <-> | D | 95201MX | 36115G | 95201MI | GL15000M | HG37001 |
| 6313G | 315 701 | Mercedes Benz | Sprinter Pick up 4,6t. (largo) | 12/00-> | D | 95202MX | 36319G | 95202MI | - | - |
| 6012 | 315 767 | Mercedes Benz | Sprinter Pick Up / Furgón 3,5t | <-> | T | 83785MX | 62374G | 83785MI | B48002M | AC30911 |
| - | 315 774 | GM | Cobalt / Onix / Prisma /Spin / Sonic | 11-> | T | 83855MX | 42740G | 83855MI | - | HG31213 |
| - | 315 777 | Renault | Clio Mío | 12-> | D | 94209MX | 34445G | 94209MI | - | - |
| - | 315 851 | Peugeot | 3008 | 10-> | DI | E7106 | - | - | - | - |
| - | 315 852 | Peugeot | 3008 | 10-> | DD | E7106 | - | - | - | - |
| - | 315 853 | Peugeot | 3008 | 10-> | T | E2079 | - | - | - | - |
| E11010G | 315 854 | Volvo | Volvo S60 / S80 | 98-> | T | - | - | - | - | - |
| - | 315 869 | BMW | Serie 1 (F20) / Serie 3 (F30) | 13-> | D | - | - | - | - | - |
| - | 315 872 | BMW | Serie 1 (F20) / Serie 3 (F30) | 13-> | T | - | - | - | - | - |
| - | 315 879 | Ford | Ecosport Kinetic | 13-> | DI | 95612MX | 35753G | - | - | - |
| - | 315 880 | Ford | Ecosport Kinetic | 13-> | DD | 95611MX | 35752G | - | - | - |
| - | 315 881 | Ford | Ecosport Kinetic | 13-> | T | 83851MX | 42754G | 83851MI | - | - |
| - | 315 882 | GMC | Cobalt / Onix / Prisma /Spin / Sonic | 11-> | DI | - | 34739G | - | GP30521 | - |
| - | 315 883 | GMC | Cobalt / Onix / Prisma /Spin / Sonic | 11-> | DD | - | 34738G | - | GP30520 | - |
| - | 315 892 | Nissan | Sentra | 14-> | DI | - | - | - | - | - |
| - | 315 893 | Nissan | Sentra | 14-> | DD | - | - | - | - | - |
| - | 315 922 | Ford | Fiesta Kinetic | 11-> | DI | 94211MX | 34804G | - | GP30543 | - |
| - | 315 923 | Ford | Fiesta Kinetic | 11-> | DD | 94210MX | 34803G | - | GP30542 | - |
| - | 315 947 | Toyota | Corolla | 08-03/14 | DI | - | 35869G | - | - | - |
| - | 315 948 | Toyota | Corolla | 08-03/14 | DD | - | 35868G | - | - | - |
| - | 315 949 | Toyota | Corolla | 08-03/14 | T | - | 44870G | - | - | - |
| - | 315 956 | Citroën | C3 Picasso / C3 Aircross / New C3 | 10-> | T | E7806 | HT42019 | - | - | - |

| Código viejo SACHS | Código nuevo SACHS | Marca | Aplicación | Año | Pos. | Código FRM | Código Corven | Código Monroe int. | Código Cofap | Código Nakata |
|---|---|---|---|---|---|---|---|---|---|---|
| - | 315 957 | Peugeot | 208 (todos) | 05/13-> | T | - | 42521G | - | - | - |
| 1007G | 316 001 | VW | Passat | 01-05 | D | E2049 | 64098G | - | - | - |
| 1008G | 316 002 | VW | Vento | 06-> | T | G2101 | 42552G | - | - | - |
| 1016 | 316 005 | VW | 1500-1.8 / 1500-1.8 Rural (todos) | 71-> | T | 59098MX | 42196 | 42159MI | B47531 | - |
| 1028 | 316 006 | VW | Saveiro 1.6/ 1.8 | ->98 | T | 38021MX | 44210 | 38021MI | B47570 | AC30941 |
| 1046G | 316 012 | VW | Golf III TDI-GL Nafta / Seat Toledo | ->99 | T | 38209MX | 44376G | 38209MI | GB27106 | AC30937 |
| 1048G | 316 013 | VW | Saveiro | 06-> | T | 83842MX | - | - | BL1169 | HG31152 |
| 1052G | 316 014 | VW | Polo Classic / Seat Cordoba / Ibiza | 96-> | T | 38060MX | 44379G | 38060MI | B47846 | AC30938 |
| 1064G | 316 015 | VW | Golf IV / New Beetle / Bora / Audi A3 Seat Toledo | 99-> | T | 83756MX | 42101G | 83756MI | GB27321 | HG31040 |
| 1068G | 316 016 | Audi | Audi A4 / A6 / VW Passat | 97-> | T | S5087 | 42103G | - | GB27611 | HG79977 |
| 1076 | 316 017 | VW | Saveiro mod. nuevo | 98-> | T | 38211MX | 44348G | 38211MI | BL1053 | HG30933 |
| 1094G | 316 018 | VW | Cross Fox | 05-> | T | 83811MX | 42660G | 83811MI | GB27337 | HG31127 |
| 12003G | 316 019 | Chrysler | Cherokee / Grand Cherokee 4x2 y 4x4 / Wrangler | <-> | D | 84729MX | 62417 | 84729MI | 6181G | - |
| 12004G | 316 020 | Jeep | Cherokee Sport 2WD / 4WD | 91-01 | T | 37027 | 62418 | - | - | HG79774 |
| 12007G | 316 021 | Dodge | RAM 2500 4x4 | 04-> | D | 34522 | SP7861 | - | - | - |
| 12008G | 316 022 | Dodge | RAM 2500 4x4 | 04-> | T | 34521 | SP7862 | - | - | - |
| 1305 | 316 023 | VW | 1500-1.8 / 1500-1.8 Rural (todos) | 78-> | D | 44113MX | 22197 | 44113MI | 30099 | - |
| 1307G | 316 024 | VW | Cross Fox | 05-> | D | 94183MX | 35544G | 94183MI | GP32535 | HG33031 |
| 1312 | 316 025 | VW | Gacel / Senda | <-> | T | 38817MX | 44210 | 38817MI | B47554 | - |
| 1318 | 316 026 | VW | Gol | ->95 | T | 38817MX | 44209 | 38817MI | B47554 | HG30931 |
| 1345G | 316 027 | Audi | Audi A4 / A6 / VW Passat | 97-> | D | 26655 | 64097G | - | 4316G | HG79996 |
| 1353G | 316 028 | VW | Golf IV / New Beetle / Bora / Audi A3 Seat Toledo | 99-> | D | 94150MX | 34529G | - | GP32487 | HG33009 |
| 19004G | 316 029 | Honda | Fit | 05-> | T | 83816MX | 42728G | 83816MI | GB27532M | HG31119 |
| 2005G | 316 031 | Fiat | Idea / Punto | 05-> | D | 94184MX | 34535G | 94184MI | GP30227 | HG33043 |
| 2007G | 316 032 | Fiat | Ducato 1.8Tn | 07-> | D | - | - | - | - | - |
| 2014G | 316 033 | Fiat | Idea / Punto | 05-> | T | 83830MX | 42446G | 83830MI | GB47946 | HG31133 |
| 2032G | 316 036 | Fiat | Palio Weekend / Marea (todos) / Bravo | <-> | T | 83752MX | 42237G | 83752MI | GL12475 | HG31038 |
| 2040 | 316 037 | Fiat | Ducato / Peugeot Boxer | 96-> | T | 84736MX | 62388G | 84736MI | GL12831 | HG36043 |
| 2044G | 316 038 | Fiat | Fiorino Uno-Duna (furgon y Pick up) | 96-> | T | 38038MX | 42334 | 38038MI | GL12099 | HG36032 |
| 2064/4 | 316 039 | Fiat | Ducato 1.8Tn | 07-> | T | - | - | - | - | - |
| 22006 | 316 040 | Mitsubishi | L 200 4x4 Cab. simple / doble | <-> | T | 38033MX | 62339 | 38033MI | B48009 | - |
| 2301 | 316 041 | Fiat | 128 Europa / Super Europa | <-> | D | 44405MX | 34146 | 44405MI | MP27254 | SE30626 |
| 2302 | 316 042 | Fiat | 128 Europa / Super Europa | <-> | T | 44408MX | 34147 | 44408MI | MP27275 | SE30627 |
| 2303 | 316 043 | Fiat | 147- Spazio-Vivace / Fiorino 147- (Furgón y Pick Up) | <-> | D | 44401MX | 34148 | 44401MI | MP27260 | SE30526 |
| 2304 | 316 044 | Fiat | 147- Spazio - Vivace | <-> | T | 44402MX | 34149 | 44402MI | MP27261 | SE30527 |
| 23043/3G | 316 045 | Nissan | Frontier 4x4 | 03-> | D | 83814MX | 62503 | 83814MI | GL12854 | HG36062 |
| 2306 | 316 047 | Fiat | Regatta 85-100S / S-SC-2000 / Weekend Motor Tipo | <-> | T | 44410MX | 34151 | 44428MI | MP27104 | SE30641 |
| 2311 | 316 048 | Fiat | Duna (nafta / diesel) Sedan y Weekend / Uno | ->92 | D | 44413MX | 34154 | 44413MI | MP27270 | SE32758 |
| 2312 | 316 049 | Fiat | Duna (nafta / diesel) Sedan y Weekend / Uno | ->92 | T | 44414MX | 34155 | 44414MI | MP27271 | SE30759 |
| 2313G | 316 050 | Fiat | Duna Sedan-Weekend / Fiorino Uno / Uno | 92-> | D | 44426MX | 34156 | 44426MI | MP32316 | SE31057 |
| 2315 | 316 051 | Fiat | Regatta S-SC-2000 / Weekend Motor Tipo | 91-> | D | 44425MX | 34153 | 44425MI | - | SE30886 |
| 2317G | 316 052 | Fiat | Palio / Siena modelo nuevo | 01-> | D | 94155MX | 34536G | 94155MI | GP30130 | HG33004 |
| 2318G | 316 053 | Fiat | Duna (nafta / diesel) Sedan y Weekend / Uno | 92-04/98 | T | 44427MX | 34157 | 44427MI | MP30094 | SE30761 |
| 2329G | 316 054 | Fiat | Palio Sedan y Weekend / Siena | ->00 | D | 94009MX | 22297G | 94009MI | G32197 | HG32768 |

| Código viejo SACHS | Código nuevo SACHS | Marca | Aplicación | Año | Pos. | Código FRM | Código Corven | Código Monroe int. | Código Cofap | Código Nakata |
|---|---|---|---|---|---|---|---|---|---|---|
| 2330G | 316 055 | Fiat | Palio / Siena | <-> | T | 83741MX | 42298G | 83741MI | GBL1119 | HG31039 |
| 2341G | 316 056 | Fiat | Tipo 1.6 - 2.0 / Tempra (Europa) | 88-> | D | 94129MX | 34453G | - | GP32212 | HG32810 |
| 2364G | 316 057 | Fiat | Uno | 05/98-> | T | 44464MX | 34259 | 44464MI | MP30094 | - |
| 3003 | 316 060 | Ford | Falcon / Sprint / Rural / Pick Up Ranchero | <-> | D | 59022MX | 42031 | 59022MI | GL12084 | - |
| 3004 | 316 061 | Ford | Falcon / Sprint / Rural | <-> | T | 59021MX | 42032 | 59021MI | GL12083 | - |
| 3005 | 316 062 | Ford | Taunus Berlina y Coupe | <-> | D | 59101MX | 42039 | 38857MI | L12527 | - |
| 3006 | 316 063 | Ford | Taunus Berlina y Coupe | <-> | T | 59102MX | 42040 | 38856MI | L12820 | - |
| 3014G | 316 067 | Ford | Pick Up F100 | 03-> | T | 84743MX | 62551 | 84743MI | - | - |
| 3015 | 316 068 | Ford | F100 | 61-65 | D | - | 62050 | - | - | - |
| 3017 | 316 069 | Ford | Pick Up F 100 T.I.B. | 66-9/92 | D | - | - | - | L12805 | AC35610 |
| 3017/3 | 316 070 | Ford | Pick Up F 100 T.I.B. | 66-9/92 | D | 59014MX | 62054 | 59014MI | - | - |
| 3018 | 316 071 | Ford | Pick Up F 100 T.I.B. / Pick up Mazda 4x2 (--91) | 66-8/73 | T | - | - | - | L12806 | - |
| 3018/3 | 316 072 | Ford | Pick Up F 100 T.I.B./ Pick up Mazda 4x2 (--91) | 66-8/73 | T | 59072MX | 62058 | - | - | - |
| 3020 | 316 073 | Ford | Pick Up F 100 T.I.B. | 9/73-9/92 | T | - | - | - | L12807 | AC35611 |
| 3020/3 | 316 074 | Ford | Pick Up F 100 T.I.B. | 9/73-9/92 | T | 59090MX | 62060 | 59090MI | - | - |
| 3023/3 | 316 075 | Ford | Pick Up F 250 / F350 T.I.B. / F400 | 67-> | D | 59055MX | 62071 | 59055MI | L12804 | HG36037 |
| 3024/3 | 316 076 | Ford | Pick Up F 250 / 350 T.I.B. | 67-> | T | 59072MX | 62074 | 59072MI | - | HG36038 |
| 3029/3G | 316 077 | Ford | F100 4x4 | 06-> | D | 84749MX | - | 84749MI | - | - |
| 3030/3G | 316 078 | Ford | F100 4x4 | 06-> | T | 84750MX | - | 84750MI | - | - |
| 3032G | 316 079 | Ford | Ka línea nueva | 08-> | T | 83826MX | 44657G | - | GB29949M | HG31126 |
| 3039 | 316 080 | Isuzu | Trooper 4x4 / Hyundai H1 | 92-> | D | 37108 | 52012G | - | - | AC35909 |
| 3050 | 316 081 | Ford | Sierra XR4 / L-Ghia-GLX (13") (--86)/ Ghia S-GL (14") | <-> | T | 38101MX | 42044 | 38101MI | B47650 | - |
| 3055/3 | 316 082 | Ford | Pick Up F 150 4x4 | <-> | D | 59601MX | 62068 | 59601MI | GL12342 | - |
| 3056/3 | 316 083 | Ford | Pick Up F 150 4x4 | <-> | T | 59602MX | 62069 | 59602MI | GL12343 | - |
| 3059 | 316 084 | Ford | F100/ F150/ F1000 | 4/92-> | D | - | - | - | L12828 | HG36034 |
| 3059/3 | 316 085 | Ford | F100/ F150/ F1000 | 4/92-> | D | 59628MX | 62062 | 59628MI | - | - |
| 3060G | 316 086 | Ford | Galaxy / VW Carat (--92) / Santana | 92-> | T | 38201MX | 44304 | 38201MI | B27039 | HG30929 |
| 3062 | 316 087 | Ford | F100 / F150 / F1000 | 4/92-> | T | - | - | - | L12823 | AC35716 |
| 3062/3 | 316 088 | Ford | F100 / F150 / F1000 | 4/92-> | T | 59629MX | 62063 | 59629MI | - | HG36035 |
| 3064G | 316 089 | Ford | Escort 1.6 y 1.8 (plataforma Orion) / Orion / Pointer | <-> | T | 83733MX | 44268 | 83733MI | GB47751 | HG30926 |
| 3065/3 | 316 090 | Ford | Pick Up F 4000 | <-> | D | 60523 | 62250 | - | - | AC35917 |
| 3066/3 | 316 091 | Ford | Pick Up F 4000 | <-> | T | 60524 | 62079 | - | - | AC35972 |
| 3068 | 316 092 | Ford | Fiesta con y sin barra estabilizadora | ->96 | T | 38204MX | 44272 | 38204MI | B47817 | AC27683 |
| 3077/3G | 316 093 | Ford | Ranger y Explorer 4x2 / 4x4 | 96-> | D | 84731MX | 62425 | 84731MI | L13001M | HG36039 |
| 3080G | 316 094 | Ford | Escort 1.8 (16 v) Zetec y diesel (exc. coupe y cabrio) | 97-> | T | 83742MX | 44323G | 83742MI | GB47824 | HG30927 |
| 3082G | 316 095 | Ford | Fiesta Zetec y Diesel | 96-> | T | 83746MX | 44319G | 83746MI | GB47778 | HG30928 |
| 3084G | 316 096 | Ford | Ka | 97-> | T | 83745MX | 44367G | 83745MI | GB47780 | HG30930 |
| 3088/3 | 316 097 | Ford | Explorer 4x2 / 4x4 | 95-> | T | 83744MX | 62430 | 83744MI | - | - |
| 3098G | 316 099 | Ford | Courier Van | 97-> | T | 83770MX | 42381G | 83770MI | GBA47108 | - |
| 3102 | 316 100 | Ford | Escort 1.8 (16 v) Zetec y diesel Rural | 97-> | T | 83739MX | 42382G | 83739MI | GB47833 | - |
| 3103G | 316 101 | Ford | F100 | 99-> | D | 84733MX | - | 84733MI | - | - |
| 3104 | 316 102 | Ford | F100 | 99-> | T | 84734MX | - | 84734MI | - | - |
| 3106/3G | 316 103 | Ford | Ranger 4x2 / 4x4 | 96-> | T | 84732MX | 62426 | 84732MI | L13002M | HG36040 |
| 3112G | 316 104 | Ford | Focus | 99-> | T | 83754MX | 42221G | 83754MI | GB27364 | HG31060 |
| 3301 | 316 105 | Ford | Sierra Ghia "S"-GL (Rodado14") / Rural (Rodado14") | 6/86-> | D | 44412MX | 34045 | 44412MI | MP27273 | - |
| 3303 | 316 106 | Ford | Escort 1.6 (todos, incl. XR3 1.8 Cabrio) | ->96 | D | 44420MX | 34047 | 44420MI | GP27258 | SE30851 |

| Código viejo SACHS | Código nuevo SACHS | Marca | Aplicación | Año | Pos. | Código FRM | Código Corven | Código Monroe int. | Código Cofap | Código Nakata |
|---|---|---|---|---|---|---|---|---|---|---|
| 3304 | 316 107 | Ford | Escort 1.6 (incl. XR3 1.8 Cabrio) / 1.8 XR3 Coupe | ->96 | T | 44421MX | 34048 | 44421MI | GP27259 | SE30852 |
| 3307G | 316 108 | Ford | Galaxy / VW Carat (--92) | 92-> | D | 44117MX | 22211 | 44117MI | 32320 | HG30784 |
| 3311G | 316 109 | Ford | Escort 1.6 y 1.8 (plataforma Orion) / Orion / Pointer | <-> | D | 94130MX | 34267 | 94130MI | GP32143 | HG32693 |
| 3313 | 316 110 | Ford | Fiesta (todos) | ->96 | D | 44449MX | 34271 | 44442MI | MP27276 | - |
| 3319G | 316 111 | Ford | EcoSport | 03-> | D | 94166MX | 34385G | 94166MI | GP30313 | HG31102 |
| 3321G | 316 112 | Ford | Escort 1.8 Zetec y diesel / Coupe/ Cabrio / Rural | 97-99 | D | 94137MX | 34322G | 94137MI | GP30097 | HG30795 |
| 3323G | 316 113 | Ford | Courier Van / Fiesta Zetec y Diesel | 97-> | D | 94139MX | 34318G | 94139MI | GP30074 | HG30791 |
| 3325G | 316 114 | Ford | Ka | 97-> | D | 94138MX | 34366G | 94138MI | GP30079 | HG30793 |
| 3327G | 316 116 | Ford | Transit 120 / 190 (incl. minibus) | 97-> | D | 95305MX | 36020G | 95305MI | 1367H | - |
| 3335G | 316 117 | Ford | Focus | 99-> | DD | 94146MX | 34220G | 94146MI | 1371GR | HG31058d |
| 3337G | 316 118 | Ford | Escort 1.8 Zetec y diesel / Coupe/ Cabrio / Rural | 99-> | D | 94144MX | 34420G | 94144MI | - | HG30891 |
| 3339G | 316 119 | Ford | Focus | 99-> | DI | 94147MX | 34221G | 94147MI | 1371GL | HG31059i |
| 4006G | 316 122 | Renault | Megane II | 05-> | T | E1319 | 42442G | - | GB47969 | - |
| 4010G | 316 123 | Renault | Logan / Sandero | 08-> | T | 83824MX | 42655G | 83824MI | GB48039 | HG31129 |
| 4017 | 316 124 | Renault | R4L- R4F- R4S- R4- R6 | 70-> | D | 42255MX | 42116 | 42255MI | B47238 | AP25422 |
| 4018 | 316 125 | Renault | R4L- R4F- R4S- R4- R6 | 70-> | T | 38880MX | - | 38880MI | B47239 | AP25426 |
| 4032 | 316 126 | Hyundai | H100 / Jeep (--73) | 94-> | T | 42147MX | 42168 | 42147MI | B47805 | AC30848 |
| 4033 | 316 127 | Jeep | Jeep | ->73 | D | 38939MX | 42110 | 38939MI | - | - |
| 4035G | 316 128 | Renault | Master Corto / Largo | 99-> | D | 84745MX | 62455 | 84745MI | GL12845 | HG36052 |
| 4046 | 316 129 | Renault | R18 1400-1600-2000- Berlina y Break | <-> | T | 38836MX | 42125 | - | B47473 | AP25431 |
| 4052 | 316 130 | Renault | R9 y R11 | <-> | T | 38103MX | 42135 | 38103MI | B47617 | AC30661 |
| 4054 | 316 131 | Renault | R12 GTL | 90-> | T | 38840MX | 42124 | 38840MI | B47808 | AP25425 |
| 4056 | 316 132 | Renault | Traffic Confort / Standard | 86-> | T | 59059MX | 62140 | 59059MI | L12827 | AC35607 |
| 4060G | 316 133 | Renault | R19 (todos) | <-> | T | 38024MX | 42137G | 38024MI | B47813 | AC30814 |
| 4062G | 316 134 | Renault | R21 - Alize - Nevada | <-> | T | 83721MX | 42057G | 83721MI | GB47704 | - |
| 4068 | 316 135 | Renault | Express (todos) | <-> | T | 38037MX | 42327 | 38037MI | BL1092 | - |
| 4070G | 316 136 | Renault | Clio 1,6 RL/ RT/ Diesel (todos) | ->12/99 | T | 38039MX | 42270G | 38039MI | BL1092 | HG77025 |
| 4076G | 316 137 | Renault | Megane Scenic | 98-> | T | 84737MX | 42699G | 84737MI | GL12466 | - |
| 4078 | 316 138 | Renault | Kangoo Kombi / Furgon | 98-> | T | 83749MX | 42702G | 83749MI | L13108CY | HG31163 |
| 4086G | 316 139 | Renault | Twingo | <-> | T | 38203MX | 44295G | 38203MI | GB47859 | - |
| 4094G | 316 140 | Renault | Megane / Megane serie II / Coupe | 96-> | T | 38253MX | 42698G | 38253MI | GL12900 | - |
| 4096G | 316 141 | Renault | Master Corto / Largo | 99-> | T | 84746MX | 62457 | 84746MI | GL12844 | HG36053 |
| 4301 | 316 142 | Renault | R12 GTL / R12 L-TS-TL-Break | <-> | D | 59113MX | 64118 | 59113MI | L12334 | - |
| 4301i | 316 143 | Renault | R12 GTL / R12 L-TS-TL-Break sin accesorios | <-> | D | 59086MX | 64119 | 59086MI | L12333 | AC35424 |
| 4303i | 316 144 | Renault | R18 2000 Berlina y Break sin accesorios | ->84 | D | 59108MX | 64123 | 59108MI | L12816 | - |
| 4305i | 316 145 | Renault | R18 1400 sin accesorios | ->84 | D | 59124MX | 64129 | 59124MI | L12817 | - |
| 4309G | 316 146 | Renault | R9 y R 11 | <-> | D | 44422MX | 34134 | 44422MI | MP27269 | SE30660 |
| 4311i | 316 147 | Renault | R18 1600 / 2000-1400 sin accesorios | <-> | D | 59057MX | 64127 | 59057MI | L12818 | AC35605 |
| 4315 | 316 148 | Renault | Traffic Standard (Carter Corto 277,3mm) | 86-> | D | 46401MX | 23003 | 46401MI | G32328 | - |
| 4317 | 316 149 | Renault | Traffic Confort (Carter Largo 297,3 mm) | 86-> | D | 46402MX | 23002 | 46402MI | G32329 | CT29387 |
| 4319G | 316 150 | Renault | R19 | ->6/99 | D | 44423MX | 34136G | 44423MI | MP27262 | SE30813 |
| 4335 | 316 151 | Renault | Clio 1,6 RL/ RT | 96->3/99 | D | 44441MX | 34269G | 44441MI | GP35948 | SE30815 |
| 4337G | 316 152 | Renault | Twingo | <-> | D | 94135MX | 34294G | 94135MI | GP30121 | - |
| 4339G | 316 153 | Renault | Clio II 1.2 | 03-> | D | 94151MX | 34447G | 94151MI | GP30108 | - |
| 4351G | 316 154 | Renault | Megane / Megane serie II / Coupe / Scenic (origen Brasil) | 96-> | D | 44455MX | 34697G | 44455MI | GP32313 | HG31190 |

| Código viejo SACHS | Código nuevo SACHS | Marca | Aplicación | Año | Pos. | Código FRM | Código Corven | Código Monroe int. | Código Cofap | Código Nakata |
|---|---|---|---|---|---|---|---|---|---|---|
| **4355G** | **316 155** | Renault | Kangoo Express / Kombi | 98-> | D | **94143MX** | **34701G** | **94143MI** | **MP30214** | **HG31162** |
| **4359G** | **316 156** | Renault | R19 | 6/99-> | D | **44457MX** | **34419G** | **44457MI** | **-** | **-** |
| **4361** | **316 157** | Renault | Express | 97-> | D | **44452MX** | **34326** | **44452MI** | **GP35945** | **-** |
| **4363** | **316 158** | Renault | Clio 1,4 Energy / 1,9 Diesel (plato bajo) | ->03/99 | D | **44459MX** | **34303G** | **44459MI** | **-** | **-** |
| **4365G** | **316 159** | Renault | Laguna / Nevada | 95-> | D | **E4495** | **34222G** | **-** | **GP27302** | **HG78450** |
| **4379** | **316 160** | Renault | Clio 1,6 RL/ RT/ Diesel | 3/99-> | D | **44456MX** | **34413G** | **44456MI** | **-** | **SE30896** |
| **4381G** | **316 161** | Renault | Clio 1.6 y 1.9D (Serie II) | 12/99-> | D | **94152MX** | **34214G** | **94152MI** | **GP30110** | **HG33002** |
| **5006G** | **316 162** | GMC | Meriva | 03-> | T | **83803MX** | **42549G** | **-** | **GBL1035** | **HG31110** |
| **5010G** | **316 163** | GMC | Zafira | 01-> | T | **83772MX** | **42553G** | **-** | **GBL1105** | **HG31041** |
| **5017/3** | **316 165** | GMC | Pick Up C10-P10-P20 | 63-6/73 | D | **59009MX** | **62093** | **59009MI** | **-** | **-** |
| **5018** | **316 166** | GMC | Pick Up C10-P10-P20 | 63-6/73 | T | **59071MX** | **62094** | **59071MI** | **L12811** | **-** |
| **5019/3** | **316 168** | GMC | Pick Up C10-P10-P20 | 7/73-79 | D | **59009MX** | **62096** | **59009MI** | **-** | **-** |
| **5020** | **316 169** | GMC | Pick Up C10-P10-P20 | 7/73-79 | T | **59097MX** | **62097** | **59097MI** | **L12813** | **AC35901** |
| **5033/3** | **316 170** | GMC | Pick Up C10 Sevel | 85-3/89 | D | **59135MX** | **62099** | **59135MI** | **-** | **-** |
| **5034** | **316 171** | GMC | Pick Up C10 Sevel | 85-3/89 | T | **59136MX** | **62100** | **59136MI** | **-** | **-** |
| **5051/3** | **316 172** | GMC | Pick Up D20 C20 | 90-> | D | **59634MX** | **62105** | **59634MI** | **L12047** | **AC35481** |
| **5052/3** | **316 173** | GMC | Pick Up D20 C20 | 90-> | T | **59635MX** | **62106** | **59635MI** | **L12048** | **AC35482** |
| **5059** | **316 174** | GMC | Blazer - S10 4x2 | 93-> | D | **84738MX** | **-** | **84738MI** | **L12378** | **-** |
| **5059/3** | **316 175** | GMC | Blazer - S10 4x2 | 93-> | D | **84738MX** | **62305** | **84738MI** | **-** | **HG36027** |
| **5061/3** | **316 176** | GMC | Silverado / Grand Blazer | 96-> | D | **59634MX** | **62105** | **59634MI** | **L12123** | **AC35804** |
| **5076** | **316 177** | GMC | Blazer - S10 4x2 / S10 4x4 | 93-> | T | **84739MX** | **-** | **84739MI** | **L12412** | **-** |
| **5076/3** | **316 178** | GMC | Blazer - S10 4x2 / S10 4x4 | 93-> | T | **59662MX** | **62306** | **59662MI** | **-** | **HG36029** |
| **5078/3** | **316 179** | GMC | Silverado / Grand Blazer | 96-> | T | **59635MX** | **62106** | **59635MI** | **L12109** | **AC35805** |
| **5088G** | **316 180** | GMC | Vectra | 96-> | T | **83748MX** | **44258G** | **SP064** | **GB27268** | **HG30925** |
| **5094** | **316 181** | GMC | Corsa Combo Van y Pick up | 97-> | T | **38212MX** | **42424** | **38212MI** | **BL1051** | **HG30971** |
| **5105/3** | **316 182** | GMC | Blazer - S10 4x4 | 93-> | D | **59661MX** | **62375** | **-** | **L12122** | **HG36028** |
| **5110G** | **316 183** | GMC | Astra Sedan GL / GLS (mod. nuevo) | 98-> | T | **83796MX** | **42225G** | **SP243** | **GBL1085** | **HG30873** |
| **5305G** | **316 185** | GMC | Kadett / Ipanema | 91-> | D | **43805MX** | **22313** | **43805MI** | **32176** | **CT32593** |
| **5309G** | **316 186** | GMC | Vectra | 96-> | DI | **94142MX** | **34057G** | **SP062** | **GP30100** | **HG32779i** |
| **5311G** | **316 187** | GMC | Vectra | 96-> | DD | **94141MX** | **34056G** | **SP063** | **GP30101** | **HG32778d** |
| **5319G** | **316 188** | GMC | Astra Sedan GL / GLS (mod. nuevo) | 98-> | DI | **94165MX** | **34504G** | **SP040** | **GP32276** | **HG32872i** |
| **5321G** | **316 189** | GMC | Astra Sedan GL / GLS (mod. nuevo) | 98-> | DD | **94164MX** | **34503G** | **SP039** | **GP32277** | **HG32871d** |
| **6013/3** | **316 190** | Mercedes Benz | MB 180 D Kombi reforz. | <-> | D | **59626MX** | **62167** | **59626MI** | **L12385** | **AC35840** |
| **6036** | **316 192** | Mercedes Benz | Sprinter 413 4,6 t. (modelo nuevo) | 02-> | T | **83802MX** | **62675G** | **83802MI** | **-** | **-** |
| **6307G** | **316 193** | Mercedes Benz | Clase A 140-160-170-190 (Chasis 168) | 98-> | D | **E4390** | **34480G** | **-** | **-** | **-** |
| **7002G** | **316 201** | Peugeot | 307 | <-> | T | **83797MX** | **42723G** | **83797MI** | **GL13081** | **HG31131** |
| **7003G** | **316 202** | Peugeot | 307 | <-> | DI | **G7268** | **34723G** | **-** | **GP32691** | **HG33039i** |
| **7005G** | **316 203** | Peugeot | 307 | <-> | DD | **G7267** | **34722G** | **-** | **GP32692** | **HG33038d** |
| **7010** | **316 204** | Peugeot | 404 Berlina- Polimek / 504 / 505 (todos) | <-> | T | **59069MX** | **42182** | **59069MI** | **L12346** | **AC25421** |
| **7018** | **316 205** | Peugeot | Pick Up 504 | 81-92 | T | **59043MX** | **42190** | **59043MI** | **GL12424** | **-** |
| **7020G** | **316 206** | Peugeot | 405 GR-SR-SRI (incluido Break) / MI 16V | <-> | T | **38025MX** | **42194G** | **38025MI** | **GB47826** | **HG77037** |
| **7022** | **316 207** | Peugeot | Pick Up 504 | 06/92-> | T | **59659MX** | **42238** | **59659MI** | **GL12349** | **AC35798** |
| **7028G** | **316 208** | Peugeot | 205 | 93-> | T | **38029MX** | **42401G** | **38029MI** | **B47615** | **HG31168** |
| **7030G** | **316 209** | Peugeot | 306 / Citroën ZX / Xsara | <-> | T | **38041MX** | **42333G** | **38041MI** | **B47615** | **HG31168** |
| **7032** | **316 210** | Peugeot | 106 / Citroën Saxo | <-> | T | **38045MX** | **42317** | **38045MI** | **GB47698** | **-** |
| **7036G** | **316 211** | Peugeot | 406 (todos) | 97-> | T | **S2029** | **42415G** | **-** | **7030G** | **HG79953** |
| **7040** | **316 212** | Peugeot | Partner / Citroën Berlingo | 97-> | T | **38254MX** | **42407G** | **38254MI** | **GB47595** | **HG31150** |
| **7048** | **316 213** | Peugeot | 206 | 99-> | T | **38216MX** | **42722G** | **38216MI** | **GBL1206** | **HG31032** |
| **7305** | **316 214** | Peugeot | 404 Berlina-Sist.Polimek-P.up/ 504 GLD-GLS-SL | <-> | D | **44101MX** | **22181** | **44101MI** | **32324** | **-** |

| Código viejo SACHS | Código nuevo SACHS | Marca | Aplicación | Año | Pos. | Código FRM | Código Corven | Código Monroe int. | Código Cofap | Código Nakata |
|---|---|---|---|---|---|---|---|---|---|---|
| 7321 | 316 215 | Peugeot | 504 y 505 SR-GR-SRD/ 505 Familiar G. Tour | 86-> | D | 44110MX | 22293 | 44110MI | 32322 | CT30775 |
| 7323 | 316 216 | Peugeot | Pick Up 504 | 2/86-9/88 | D | 40004MX | 22191 | 40004MI | 32325 | CT30608 |
| 7329 | 316 217 | Peugeot | Pick Up 504 | 10/88-> | D | 44114MX | 22192 | 44114MI | 32327 | CT30797 |
| 7331G | 316 218 | Peugeot | 405 GR-SR-SRI (incluido Break) | <-> | D | 44424MX | 34193G | 44424MI | GP27274 | HG78400 |
| 7335G | 316 219 | Peugeot | 205 / Citroën C15 | 85-> | D | 44429MX | 34400G | 44429MI | MP27132 | HG78041 |
| 7339G | 316 220 | Peugeot | 306 / Citroën ZX / Xsara / Partner y Berlingo susp. baja | <-> | D | 44447MX | 34331G | 44447MI | GP32253 | HG33014d |
| 7343G | 316 221 | Peugeot | 106 / Citroën Saxo | <-> | D | 43806MX | 22316 | 43806MI | G32337 | - |
| 7371G | 316 222 | Peugeot | 206 | 99-> | DD | 44460MX | 34720G | 44460MI | GP30178 | HG33012d |
| 7373G | 316 223 | Peugeot | 206 | 99-> | DI | 44460MX | 34721G | 44460MI | GP30179 | HG33013i |
| 7375G | 316 224 | Peugeot | Partner / Berlingo susp. original | 07/96-> | DI | 44458MX | 34327G | 44458MI | GP32586 | HG33015i |
| 7377G | 316 225 | Peugeot | Partner / Berlingo susp. original | 07/96-> | DD | 44458MX | 34327G | 44458MI | GP32585 | HG33014d |
| 8001 | 316 226 | Mitsubishi | L 200 4x2 / Hilux 2000 (--86) | ->89 | D | 59134MX | 42218 | 59134MI | - | - |
| 8002 | 316 227 | Mitsubishi | L 200 y L300 4x2 / Hilux 2000 | ->89 | T | 59640MX | 42219 | 59640MI | L12129 | - |
| 8043/3G | 316 228 | Nissan | Pick Up 720 4x2 / D21-D22 4x2 y 4x4 / 2WD/ Luv 4x2 | <-> | D | 65331 | 62236 | - | GL12926 | - |
| 8044/3G | 316 229 | GMC | Pick Up Luv 4X2 y 4x4 / Isuzu 4x2 y 4x4 / Amigo | <-> | T | 65329 | 62234 | - | - | - |
| 8044G | 316 230 | GMC | Pick Up Luv 4X2 y 4x4/ Isuzu 4x2 y 4x4/ Amigo | <-> | T | 38033MX | 42234 | 38033MI | B47815 | AC30902 |
| 8045/3G | 316 231 | GMC | Luv 4X4 / Isuzu 4x4/ Mazda 4x2 y 4x4 / D22 4x4 | 90-> | D | 59647MX | 62233 | 38016MI | B47812 | AC35909 |
| 8050 | 316 232 | Land Rover | Discovery / Defender | <-> | T | D6643 | 62549 | - | L12211 | - |
| 8051 | 316 233 | Land Rover | Discovery / Defender | <-> | D | D6437 | 62548 | - | L12210 | - |
| 8053 | 316 234 | Hyundai | H100 / Mitsubishi L300 4x2 | 94-> | D | 83809MX | 42167 | - | B47804 | - |
| 8055/3G | 316 235 | Mitsubishi | Montero / L200 4x4 (97--) | 93-> | D | RS5223 | 62506 | - | - | - |
| 8061/3G | 316 236 | Toyota | Hilux 4x4 | 97-> | D | - | 62415 | - | - | - |
| 8061G | 316 237 | Toyota | Hilux 4x4 | 97-> | D | 83736MX | - | 83736MI | GB48003M | HG30923 |
| 8062G | 316 238 | Toyota | Hilux 4x4 | 97-> | T | 83737MX | 62416 | 83737MI | GB48004M | HG30924 |
| 8064G | 316 239 | Nissan | Pick Up 2WD (USA)/ D21 y D22 4x2 | <-> | T | 42208MX | 42434 | 42208MI | - | - |
| 8067/3G | 316 240 | Toyota | Hilux 4x2 / Kia Besta | 97-> | D | - | 62257 | - | - | - |
| 8067G | 316 241 | Toyota | Hilux 4x2 / Kia Besta | 97-> | D | 83738MX | 42328 | 83738MI | - | AC30766 |
| 8077G | 316 242 | Toyota | Corolla | 92-01 | DI | 16646 | 34361G | - | GP32576 | - |
| 8079G | 316 244 | Toyota | Corolla | 92-01 | DD | 16645 | 34360G | - | GP32575 | - |
| 8090/3G | 316 245 | Toyota | Hilux 4x2 / Mazda 4x2 / Nissan 4x4 / Kia Besta | 97-> | T | - | 62313 | - | - | HG31157 |
| 8090G | 316 246 | Toyota | Hilux 4x2 / Mazda 4x2 / Nissan D21 4x4 / Kia Besta | 97-> | T | 38242MX | 42329 | 38242MI | GB47867 | AC30767 |
| 8102G | 316 247 | Toyota | Corolla | 03-12/07 | T | 83819MX | 44540G | SP252 | GBL1205 | HG31115 |
| 8103G | 316 248 | Toyota | Corolla mod. nuevo | 03-12/07 | DI | 94188MX | HT35869 | SP274 | GP32498 | HG33019i |
| 8105G | 316 249 | Toyota | Corolla mod. nuevo | 03-12/07 | DD | 94187MX | HT35868 | SP273 | GP32497 | HG33018d |
| 8108G | 316 250 | Toyota | Hilux 4x2 | 7/01-05 | T | 83806MX | 62117G | 83806MI | - | HG31145 |
| 8114G | 316 251 | Toyota | Hilux SW4 | 05-> | T | 83807MX | - | 83807MI | GB50960M | HG31149 |
| 8119G | 316 252 | Toyota | Hilux 4x2 / 4x4 / SW4 | 05-> | D | 83805MX | 64116G | 83805MI | GB50961M | HG31144 |
| 8133/3 | 316 253 | Mitsubishi | L 200 4x2 / 4x4 | 89-97 | D | 37097 | 62338 | - | L12133 | AC31036 |
| 8134/3 | 316 254 | Mitsubishi | L 200 4x2 | 89-97 | T | 37073 | 42337 | - | B47788 | AC31035 |
| 8155G | 316 255 | Toyota | Hilux SW4 | 97-> | D | 71352 | 64115G | - | - | - |
| 8156 | 316 256 | Toyota | Hilux SW4 | 97-> | T | 37157 | 62351G | - | - | - |
| 9001 | 316 257 | Citroën | 3CV y Furgoneta / 3CV-IES América / Ami 8 / Mehari | ->83 | D | 38884MX | - | 38884MI | - | AC26056 |
| 9003G | 316 258 | Citroën | C3 | 05-> | DD | 94191MX | 34724G | 94191MI | GP30345M | HG33033d |
| 9005G | 316 259 | Citroën | C3 | 05-> | DI | 94192MX | 34725G | 94192MI | GP30346M | HG33034i |
| 9013 | 316 260 | Rastrojero | Rastrojero | 68-79 | D | 59107MX | 42229 | 59107MI | - | - |

| Código viejo SACHS | Código nuevo SACHS | Marca | Aplicación | Año | Pos. | Código FRM | Código Corven | Código Monroe int. | Código Cofap | Código Nakata |
|---|---|---|---|---|---|---|---|---|---|---|
| 9020G | 316 261 | Citroën | C3 | 05-> | T | 83822MX | 42727G | 83822MI | GB27531M | HG31125 |
| 9313G | 316 262 | Citroën | Xsara Picasso | 00-> | D | 94170MX | 34516G | - | GP32585 | HG33014d |
| 12006G | 316 266 | Jeep | Grand Cherokee 4x2 / 4x4 / Wrangler | ->01 | T | 84730MX | 62401 | 84730MI | 6182G | - |
| 8043G | 316 268 | Nissan | Pick Up 720 4x2 / D21-D22 4x2 y 4x4 / 2WD / Luv 4x2 | <-> | D | 38032MX | 42231 | 38032MI | BL1090 | AC25418 |
| 5074G | 316 269 | GMC | Corsa Sedan / Wagon / Tigra | <-> | T | 38040MX | 42302G | 38040MI | GB47061 | HG31106 |
| 1313G | 316 270 | VW | Gol / Saveiro | <-> | D | 44119MX | 22208G | 44119MI | 32208 | HG31098 |
| 1030G | 316 271 | VW | Gol | 95-> | T | 38205MX | 44277G | 38205MI | B47097 | HG30932 |
| 1347G | 316 272 | VW | Polo / Caddy / Golf III GLX-GTI 2.0 / Seat Inca | 96-> | D | 43901MX | 34527G | 43901MI | MP32384 | SE32787 |
| 1327G | 316 273 | VW | Golf III TDI-GL Nafta / Seat Córdoba / Ibiza/ Toledo | 94-99 | D | 43901MX | 34527G | 43901MI | GP32378 | HG31018 |
| 8328G | 316 274 | Toyota | RAV 4 | 94-> | T | D7694 | - | - | 4959G | - |
| 5021G | 316 275 | GMC | Corsa II - Meriva | 02-> | DD | 94172MX | 34546G | 94172MI | GP30134 | HG31104d |
| 5023G | 316 276 | GMC | Corsa II - Meriva | 02-> | DI | 94173MX | 34547G | 94173MI | GP30133 | HG31105i |
| 3009G | 316 277 | Ford | Fiesta línea nueva | 02-> | D | 94163MX | 34383G | 94163MI | GP30231 | HG31100 |
| 3008G | 316 278 | Ford | Fiesta línea nueva | 02-> | T | 83774MX | 42384G | 83774MI | GB27471 | HG31101 |
| 3012G | 316 279 | Ford | EcoSport | 03-> | T | 83784MX | 42386G | 83784MI | GB27472 | HG31103 |
| 1086G | 316 280 | VW | Fox | 04-> | T | 83804MX | 42736G | 83804MI | GB27320 | HG31107 |
| 4020 | 316 281 | Renault | R12 L-TS-TL-Break | ->89 | T | 38842MX | 42121 | - | B47808 | AC30897 |
| 8084G | 316 282 | Rover | 414-416-420 / 214-216-220 (90-95) | 90-> | T | E1141 | 44028G | - | - | - |
| 4082G | 316 283 | Renault | Laguna | 95-> | T | S5309 | 42224G | - | GBA47203 | HG79559 |
| 315 361 | 316 290 | Renault | Duster 4x4 | 11-> | T | G7386 | - | - | - | - |
| - | 316 292 | Renault | Duster 4x2 / 4x4 | 11-> | D | G7372 | 34277G | - | - | - |
| - | 316 331 | Peugeot | 508 | 12-> | DI | E7102 | - | - | - | - |
| - | 316 332 | Peugeot | 508 | 12-> | DD | E7102 | - | - | - | - |
| 5307 | 316 358 | GMC | Corsa Sedan / Combo Van / Wagon / Pick Up / Tigra | <-> | D | 44446MX | 34301G | 44446MI | GP30064 | HG30943 |
| - | 316 386 | VW | Vento 2.0 TDI | 05/11-> | T | - | 42322G | - | - | - |
| - | 316 387 | Fiat | Grand Siena | 10/12-> | T | - | 42837G | - | - | - |
| - | 316 551 | Toyota | Etios | 13-> | D | 94218MX | 34712G | - | - | - |
| - | 316 552 | Toyota | Etios | 13-> | T | - | - | - | - | - |
| 315 531 | 316 553 | Renault | Fluence | 10-> | D | G8149 | 35754G | - | - | - |
| 315 532 | 316 554 | Renault | Fluence | 10-> | T | G1108 | 42755G | - | - | - |
| - | 316 555 | Renault | Kangoo PH3 | 11/13-> | D | 94208MX | 34700G | 94208MI | - | - |
| - | 316 708 | VW | Up! | 14-> | D | - | - | - | - | - |
| - | 316 760 | Ford | Focus III | 09/13-> | T | - | - | - | - | - |
| - | 316 761 | GM | Captiva | 07->14 | DI | 72527 | 36191G | - | - | - |
| - | 316 762 | GM | Captiva | 07->14 | DD | 72526 | 36190G | - | - | - |
| - | 316 851 | Kia | K2500 | 08-> | D | - | - | - | - | - |
| - | 316 852 | Kia | K2500 | 08-> | T | - | - | - | - | - |
| 4098G | 316 863 | Renault | Clio (Serie II) | 12/99-> | T | 83759MX | 42111G | 83759MI | GB47828 | HG31007 |
| - | 316 878 | Honda | CR-V | 11/06-> | DI | 72492 | 35829G | - | - | - |
| - | 316 879 | Honda | CR-V | 11/06-> | DD | 72491 | 35828G | - | - | - |
| - | 316 886 | Renault | Logan II / Sandero II | 11/13-> | T | - | - | - | - | - |
| E22007G | 316 901 | Mitsubishi | Space Wagon | 99-> | DI | - | - | - | - | - |
| E22019G | 316 902 | Mitsubishi | Space Wagon | 99-> | DD | - | - | - | - | - |
| 313 768 | 316 912 | Honda | CR-V II | 02-06 | DI | 72144 | - | - | - | HG78151i |
| 313 767 | 316 913 | Honda | CR-V II | 02-06 | DD | 72143 | - | - | - | HG78150d |
| - | 316 914 | Citroën | C3 Picasso / C3 Aircross | 08-> | DI | - | HT35018 | - | - | - |
| - | 316 915 | Citroën | C3 Picasso / C3 Aircross | 08-> | DD | - | HT35017 | - | - | - |
| - | 316 916 | Citroën | C3 New / 208 1.5 | 12-> | DI | - | 34520G | - | - | - |
| - | 316 917 | Citroën | C3 New / 208 1.5 | 12-> | DD | - | 34519G | - | - | - |

| Código viejo SACHS | Código nuevo SACHS | Marca | Aplicación | Año | Pos. | Código FRM | Código Corven | Código Monroe int. | Código Cofap | Código Nakata |
|---|---|---|---|---|---|---|---|---|---|---|
| - | 316 918 | Peugeot | 208 1.6 Vti | 06/13-> | DI | - | - | - | - | - |
| - | 316 919 | Peugeot | 208 1.6 Vti | 06/13-> | DD | - | - | - | - | - |
| - | 316 926 | Renault | Logan II / Sandero II | 11/13-> | D | - | - | - | - | - |
| 313 663 | 316 927 | Suzuki | Swift III 1.5 | 07-> | T | G1131 | 42917G | - | - | - |
| - | 316 935 | VW | Up! | 14-> | T | - | - | - | - | - |
| - | 316 938 | VW | Up! | 14-> | T | - | - | - | - | - |
| - | 316 939 | Dodge | Journey | 11-> | T | 72511 | - | - | - | - |
| 170 450 | 316 947 | Mercedes Benz | C200-C220-C220D-C250D-C280 Deportivo | 93-05/00 | D | E5026 | 42634G | - | 2706G | - |
| 315 247 | 316 989 | Ford | Kuga | 10-13 | T | 83845MX | HT42281 | 83845MI | - | - |
| 313 455 | 317 185 | Suzuki | Gand Vitara (JIII) | 09/05-> | DI | - | 35687G | - | - | - |
| 313 456 | 317 186 | Suzuki | Gand Vitara (JIII) | 09/05-> | DD | - | 35686G | - | - | - |
| 230 168 | 317 190 | Nissan | Serena Van | 95-> | DI | - | - | - | - | - |
| 230 169 | 317 191 | Nissan | Serena Van | 95-> | DD | - | - | - | - | - |
| 200 335 | 317 199 | Suzuki | Baleno / Baleno Wagon | 95-02 | TI | - | 34230G | - | - | - |
| 200 334 | 317 200 | Suzuki | Baleno / Baleno Wagon | 95-02 | TD | - | 34229G | - | - | - |
| 315 987 | 317 258 | Mercedes Benz | Clase E | 96-> | D | - | 42632G | - | - | - |
| 313 201 | 317 266 | Mercedes Benz | Clase C 180-200-220-280-320-350 (Chasis 204) | 01/07-> | T | E5117 | - | - | - | - |
| 553 870 | 317 268 | Mercedes Benz | C180-200-220-240-270-320 Sedan y Coupe | 05/00-> | T | E5098 | 42854G | - | - | - |
| - | 317 311 | Honda | CR-V | 02->12 | T | 72497 | 44830G | - | - | - |
| - | 317 316 | Renault | Clio II 1.2 | 11->08/12 | D | 94207MX | 34443G | 94207MI | - | - |
| 315 245 | 317 326 | Ford | Kuga | 10-13 | DI | E4652 | HT35280 | - | - | - |
| 315 246 | 317 327 | Ford | Kuga | 10-13 | DD | E4652 | HT35279 | - | - | - |
| 313 216 | 317 350 | Volvo | XC90 (excepto Nivomat) | 08-> | T | - | - | - | - | - |
| 553 665 | 317 355 | Mercedes Benz | Clase A 140-160-170-190 (Chasis 168) | 98-> | T | E5090 | 42479G | - | - | - |
| 314 034 | 317 385 | Mercedes Benz | GLK | 10-> | T | - | - | - | - | - |
| 7311 | 317 668 | Peugeot | 504 / 505 (todos) | ->86 | D | 44102MX | 22185 | 44102MI | 32323 | CT30776 |
| 8110G | 317 669 | Suzuki | Vitara / Grand Vitara | 89-> | T | 83765MX | 42150 | 83765MI | 4715G | - |
| - | 400 019 | VW | Sharan | 11-> | T | - | - | - | - | - |
| E11303 | 553 058 | Volvo | 850 / 850 Sports Wagon / S-V-C70 (97--) | 91-96 | D | - | - | - | - | - |
| E5100G | 553 259 | GMC | Astra Caravan (Familiar) | 92-98 | T | - | - | - | GB47647 | - |
| E28001G | 553 680 | Saab | 9-5 | 98-08/01 | D | - | - | - | - | - |
| E6009G | 553 871 | Mercedes Benz | C180-200-220-240-270-320 Sedan y Coupe | 05/00-> | D | E4630 | - | - | - | - |
| E11309G | 554 041 | Volvo | Volvo XC70 | 00-> | D | - | - | - | - | - |
| E11009G | 554 046 | Volvo | Volvo S60 / S80 | 98-> | D | - | - | - | - | - |
| E1078G | 556 281 | Audi | Audi A6 Quattro | 97-> | T | E2052 | - | - | - | - |
| E2042G | 556 307 | Alfa Romeo | 156 2,0 - JTD - V6 - 2,5V6 24V | 09/97-> | T | E4879 | 35911G | - | 5796G | - |
| E14325G | 556 832 | BMW | (E39) 520i-523i-525td-528i-530d / Touring | 95-> | D | E4622 | 36481G | - | 1135G | - |
| E14013G | 556 836 | BMW | (E39) 535i-540i | 96-00 | D | - | - | - | - | - |
| E14001G | 556 867 | BMW | (E46) 316-318-320-323-328-330d Sedan / Coupe | 99-> | DI | E4916 | 35625G | - | - | - |
| E14003G | 556 868 | BMW | (E46) 316-318-320-323-328-330d Sedan / Coupe | 99-> | DD | E4916 | 35624G | - | - | - |
| E14033G | 556 873 | BMW | (E46) 316-318-320-323-328-330d Sedan / Coupe (reforz.) | 99-> | DI | - | - | - | - | - |
| E14035G | 556 874 | BMW | (E46) 316-318-320-323-328-330d Sedan / Coupe (reforz) | 99-> | DD | - | - | - | - | - |
| E14018G | 556 882 | BMW | (E36) 316-18-20-23-25-28 / Coupe 320-23-25-28 | 92-> | T | E1020 | 42644G | - | GB47830 | - |

| Código viejo SACHS | Código nuevo SACHS | Marca | Aplicación | Año | Pos. | Código FRM | Código Corven | Código Monroe int. | Código Cofap | Código Nakata |
|---|---|---|---|---|---|---|---|---|---|---|
| **E1017G** | **557 837** | VW | Passat (3B2 / B5) plato liso | 97-11/00 | D | **-** | **-** | **-** | **-** | **-** |
| **E1041G** | **558 301** | Audi | A4 (8E2 / B6) | 01-12/04 | D | **71331** | **64099G** | **-** | **-** | **-** |
| **E6009G** | **553 871** | Mercedes Benz | C180-200-220-240-270-320 Sedan y Coupe | 05/00-> | D | **E4630** | **-** | **-** | **-** | **-** |
| **E11309G** | **554 041** | Volvo | Volvo XC70 | 00-> | D | **-** | **-** | **-** | **-** | **-** |
| **E11009G** | **554 046** | Volvo | Volvo S60 / S80 | 98-> | D | **-** | **-** | **-** | **-** | **-** |
| **E1078G** | **556 281** | Audi | Audi A6 Quattro | 97-> | T | **E2052** | **-** | **-** | **-** | **-** |
| **E2042G** | **556 307** | Alfa Romeo | 156 2,0 - JTD - V6 - 2,5V6 24V | 09/97-> | T | **E4879** | **35911G** | **-** | **5796G** | **-** |
| **E14325G** | **556 832** | BMW | (E39) 520i-523i-525td-528i-530d / Touring | 95-> | D | **E4622** | **36481G** | **-** | **1135G** | **-** |
| **E14013G** | **556 836** | BMW | (E39) 535i-540i | 96-00 | D | **-** | **-** | **-** | **-** | **-** |
| **E14001G** | **556 867** | BMW | (E46) 316-318-320-323-328-330d Sedan / Coupe | 99-> | DI | **E4916** | **35625G** | **-** | **-** | **-** |
| **E14003G** | **556 868** | BMW | (E46) 316-318-320-323-328-330d Sedan / Coupe | 99-> | DD | **E4916** | **35624G** | **-** | **-** | **-** |
| **E14033G** | **556 873** | BMW | (E46) 316-318-320-323-328-330d Sedan / Coupe (reforz.) | 99-> | DI | **-** | **-** | **-** | **-** | **-** |
| **E14035G** | **556 874** | BMW | (E46) 316-318-320-323-328-330d Sedan / Coupe (reforz.) | 99-> | DD | **-** | **-** | **-** | **-** | **-** |
| **E14018G** | **556 882** | BMW | (E36) 316-18-20-23-25-28/ Coupe 320-23-25-28 | 92-> | T | **E1020** | **42644G** | **-** | **GB47830** | **-** |
| **E1017G** | **557 837** | VW | Passat (3B2 / B5) plato liso | 97-11/00 | D | **-** | **-** | **-** | **-** | **-** |
| **E1041G** | **558 301** | Audi | A4 (8E2/ B6) | 01-12/04 | D | **71331** | **64099G** | **-** | **-** | **-** |

# Tabla de Dimensiones

## Medidas Amortiguadores Tubulares y Cápsulas

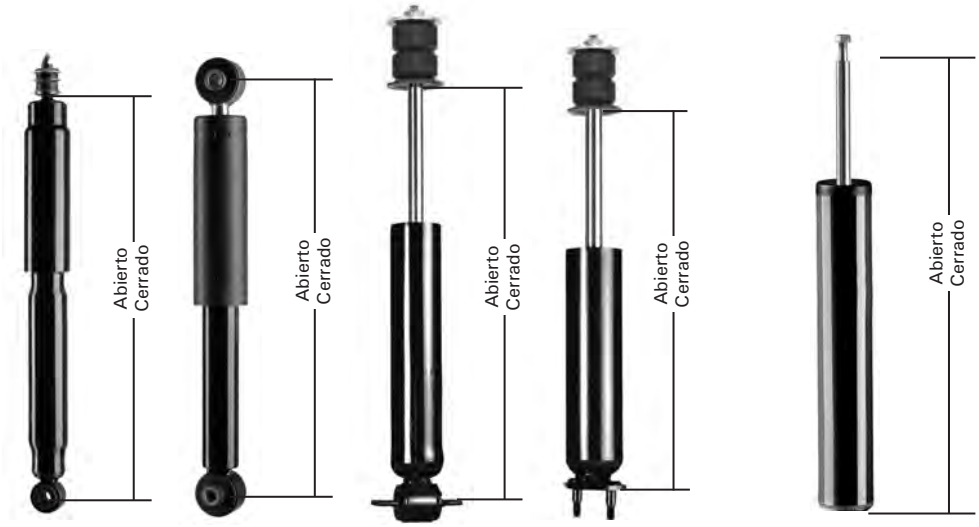


*** Cerrado:**
Comprimir el amortiguador al máximo para poder tomar la medida de referencia.

*** Abierto:**
Extender el amortiguador al máximo para poder tomar la medida de referencia.

### Referencias

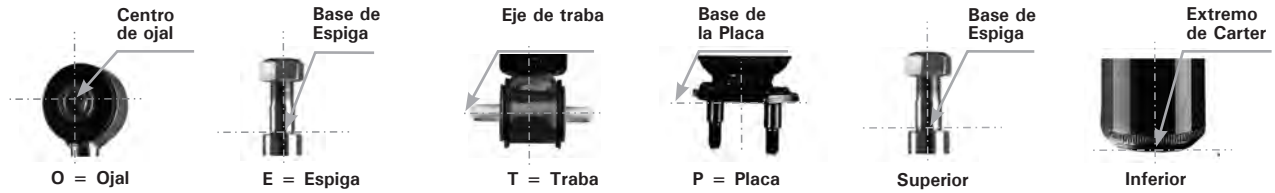


## Medidas Estructuras y Mc Pherson

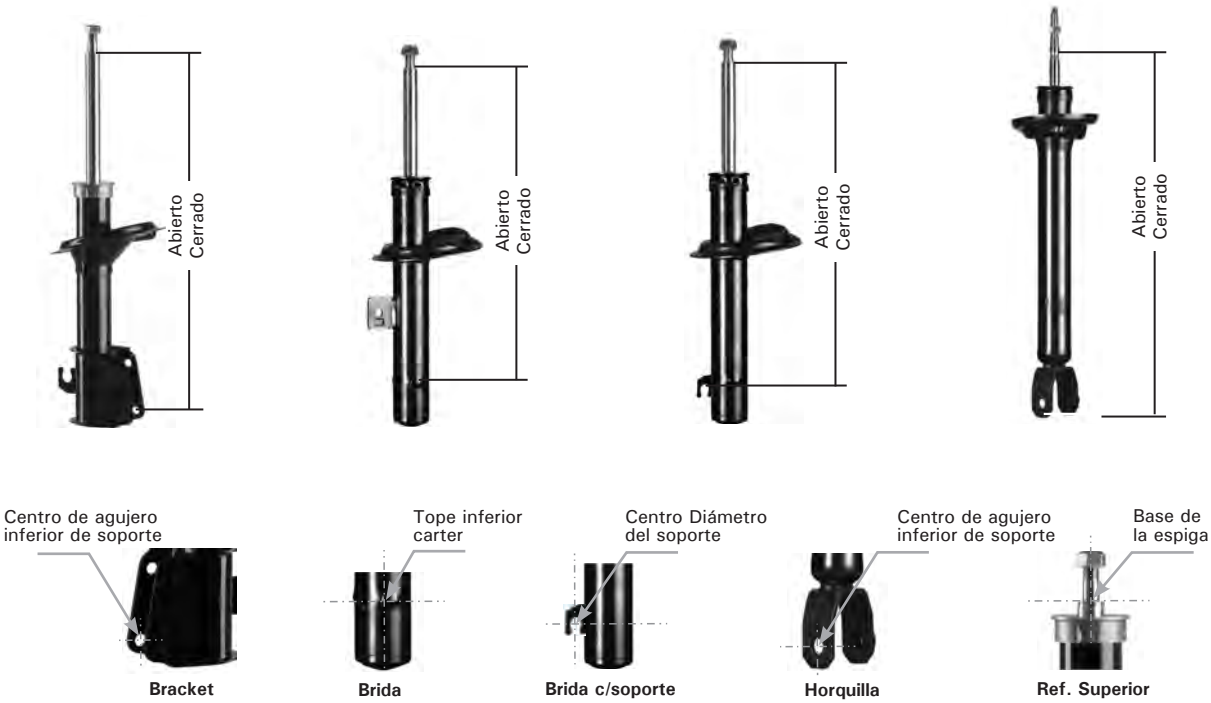

| Código viejo SACHS | Código nuevo SACHS | Marca | Aplicación | Año | Pos. | Abierto (mm) | Cerrado (mm) | Carrera (mm) |
|---|---|---|---|---|---|---|---|---|
| **12305G** | **030 012** | Chrysler | Neón 1,8 - 2,0 | 94-2/98 | **T** | **455** | **315** | **140** |
| **12300G** | **030 013** | Chrysler | Neón 1,8 - 2,0 | 94-2/98 | **T** | **490** | **362** | **128** |
| **E12313G** | **030 645** | Chrysler | Caravan | 95-> | **D** | **563** | **408** | **155** |
| **E11001** | **100 261** | Volvo | 240 / 260 / Kombi | 77-93 | **D** | **542** | **372** | **170** |
| **E8405** | **100 274** | BMW | (E21) 315-316-318--320-320USA-323i | 75-82 | **D** | **583** | **459** | **124** |
| **E8403** | **100 456** | BMW | (E30) 316-318-320-323-324-325 Deport. (mangueta 51 mm.) | 82-86 | **D** | **555** | **444** | **111** |
| **E8401G** | **100 457** | BMW | (E30) 316i-318i-320i-324d-325iX (mangueta 45 mm.) | 82-92 | **D** | **626** | **444** | **182** |
| **E11301G** | **100 662** | Volvo | 740 - 760 - 780 / 940 - 960 (--96) | 84-92 | **D** | **532** | **352** | **180** |
| **E8336** | **101 532** | BMW | (E21) 315-316-318--320-320USA-323i | 75-82 | **T** | **548** | **350** | **198** |
| **E14010G** | **105 750** | BMW | (E30) 316-318-320-324-325 / 323 Ti Compact (97-00) | 82-90 | **T** | **551** | **334** | **217** |
| **E1054** | **105 781** | VW | Passat / Variant | 93-96 | **T** | **606** | **416** | **190** |
| **E11002G** | **105 828** | Volvo | 850 / 850 Sports Wagon / S-V-C70 (97--) | 91-96 | **T** | **435** | **277** | **158** |
| **E28004G** | **106 420** | Saab | Serie 9000 (todos) | 93-99 | **T** | **568** | **440** | **128** |
| **110 638** | **110 638** | Renault | Express | ->96 | **D** | **529** | **365** | **164** |
| **30001/3** | **112 017** | SsangYong | Musso 601-602 / New Korando | 95-> | **D** | **369** | **240** | **129** |
| **E6305G** | **115 069** | Mercedes Benz | 190D/E (Chasis 201)/ 200-220-230-280E/250D-300E/Clase E | 89-96 | **D** | **607** | **439** | **168** |
| **E6303G** | **115 070** | Mercedes Benz | 190D/E (Chasis 201)/ 200-220-230-280E/250D-300E/Clase E | 89-96 | **D** | **607** | **439** | **168** |
| **E14305G** | **115 372** | BMW | (E36) 316-318-318tds-320-323-325-325tds-328 Sedan/Coupe | 92-00 | **DI** | **527** | **405** | **122** |
| **E14307G** | **115 373** | BMW | (E36) 316-318-318tds-320-323-325-325tds-328 Sedan/Coupe | 92-00 | **DD** | **527** | **405** | **122** |
| **124 393** | **124 393** | Mercedes Benz | Clase E | 96-> | **T** | **546** | **447** | **99** |
| **E1337** | **170 381** | VW | Passat / Variant | 93-96 | **D** | **557** | **402** | **155** |
| **E6018G** | **170 451** | Mercedes Benz | C200-C220-C220D-C250D-C280 Deportivo | 93-05/00 | **T** | **501** | **376** | **125** |
| **1056G** | **170 787** | VW | Transporter T4 | 96-> | **T** | **322** | **229** | **93** |
| **170 815** | **170 815** | Audi | Audi A4 Avant | 95-99 | **T** | **600** | **406** | **194** |
| **E1072G** | **170 817** | Audi | Audi A4 Quattro | 95-> | **T** | **497** | **327** | **171** |
| **E14002G** | **170 823** | BMW | (E36) Compact 316i-318ti-318tds | 94-> | **T** | **551** | **334** | **217** |
| **30002/3** | **170 847** | SsangYong | Musso 601-602 / New Korando | 95-> | **T** | **524** | **315** | **209** |
| **E14020G** | **170 855** | BMW | (E39) 520i-523i-525td-525tds-528i-530d | 9/95-99 | **T** | **590** | **401** | **189** |
| **1025G** | **170 880** | VW | Transporter T4 | 96-> | **D** | **297** | **209** | **88** |
| **E1060G** | **170 930** | VW | VW Passat reforzado | ->96 | **T** | **631** | **441** | **190** |
| **E25306G** | **200 334** | Suzuki | Baleno / Baleno Wagon | 96-02 | **TD** | **547** | **358** | **189** |
| **E25304G** | **200 335** | Suzuki | Baleno / Baleno Wagon | 96-02 | **TI** | **547** | **358** | **189** |
| **E1005G** | **200 419** | VW | Sharan | 05-> | **D** | **488** | **348** | **140** |
| **E1006G** | **200 421** | VW | Sharan | 05-> | **T** | **517** | **372** | **145** |
| **4367G** | **200 476** | Renault | Megane Scenic (origen Francia) | 98-> | **D** | **514** | **339** | **175** |
| **E12301G** | **200 685** | Chrysler | Caravan | 86-95 | **D** | **533** | **368** | **165** |
| **12000G** | **200 687** | Chrysler | Caravan Van | <-> | **T** | **471** | **300** | **171** |
| **E7361G** | **200 846** | Peugeot | 406 / Break / Coupe/ TD | 97-> | **DD** | **488** | **313** | **175** |
| **E7363G** | **200 847** | Peugeot | 406 / Break / Coupe/ TD | 97-> | **DI** | **488** | **313** | **175** |
| **E19301G** | **200 884** | Honda | Accord / Coupe / Rover 414-416-420 / 620-623 (95--) | 90-96 | **D** | **383** | **265** | **118** |
| **E8391G** | **230 016** | Honda | Civic / CRX / Coupe | 92-> | **DD** | **391** | **264** | **127** |
| **E8427G** | **230 017** | Honda | Civic / CRX / Coupe | 92-> | **DI** | **391** | **264** | **127** |
| **E22305G** | **230 130** | Mitsubishi | Colt / Lancer (mod. Nuevo) | 96-12/97 | **DI** | **472** | **323** | **149** |
| **E22307G** | **230 131** | Mitsubishi | Colt / Lancer (mod. Nuevo) | 96-12/97 | **DD** | **472** | **323** | **149** |
| **E23307G** | **230 168** | Nissan | Serena Van | 95-> | **DI** | **483** | **328** | **155** |
| **E23309G** | **230 169** | Nissan | Serena Van | 95-> | **DD** | **483** | **328** | **155** |
| **230 318** | **230 295** | Volvo | S40 / V40 | 95->03 | **DD** | **477** | **319** | **158** |

| Código viejo SACHS | Código nuevo SACHS | Marca | Aplicación | Año | Pos. | Abierto (mm) | Cerrado (mm) | Carrera (mm) |
|---|---|---|---|---|---|---|---|---|
| **230 319** | **230 296** | Volvo | S40 / V40 | 95->03 | **DI** | **477** | **319** | **158** |
| **E11006G** | **230 322** | Volvo | S40 / V40 | 09/95-> | **T** | **527** | **364** | **163** |
| **E23015G** | **230 467** | Nissan | Pathfinder 4WD V6 | 09/97-> | **DI** | **590** | **426** | **164** |
| **E23017G** | **230 468** | Nissan | Pathfinder 4WD V6 | 09/97-> | **DD** | **590** | **426** | **164** |
| **E25303G** | **280 427** | Suzuki | Baleno / Baleno Wagon | 96-02 | **DD** | **484** | **341** | **143** |
| **E25301G** | **280 428** | Suzuki | Baleno / Baleno Wagon | 96-02 | **DI** | **484** | **341** | **143** |
| **-** | **280 435** | Peugeot | Expert Furgon | 99-06 | **T** | **405** | **292** | **113** |
| **E1014G** | **280 560** | Audi | A4 (8D2/B5) espiga corta | 95-01 | **T** | **638** | **437** | **202** |
| **280 565** | **280 565** | Audi | A1 1.2 / 1.4 TFSI | 11-> | **T** | **619** | **419** | **200** |
| **E27301G** | **280 813** | Subaru | Impreza 1.6, 1.8, 2.0, 2.0GT 4WD / S.Wagon / Legacy II | 08/92-> | **DI** | **506** | **381** | **125** |
| **E27303G** | **280 814** | Subaru | Impreza 1.6, 1.8, 2.0, 2.0GT 4WD / S.Wagon / Legacy II | 08/92-> | **DD** | **506** | **381** | **125** |
| **2327G** | **280 975** | Fiat | Ducato / Peugeot Boxer | 96-> | **D** | **697** | **500** | **197** |
| **E14029G** | **290 236** | BMW | Mini Cooper | 02-> | **DI** | **418** | **279** | **139** |
| **E14031G** | **290 237** | BMW | Mini Cooper | 02-> | **DD** | **418** | **279** | **139** |
| **E14009G** | **290 239** | BMW | X5 | 00-06 | **DD** | **517** | **390** | **127** |
| **E14011G** | **290 240** | BMW | X5 | 00-06 | **DI** | **517** | **390** | **127** |
| **290 740** | **290 739** | Renault | Laguna II | 01-08 | **T** | **549** | **461** | **88** |
| **E22301G** | **290 780** | Mitsubishi | Colt / Mirage / Lancer | 92-96 | **DI** | **477** | **316** | **161** |
| **E22303G** | **290 781** | Mitsubishi | Colt / Mirage / Lancer | 92-96 | **DD** | **477** | **316** | **161** |
| **E12011G** | **290 870** | Chrysler | PT Cruiser | 01-> | **D** | **526** | **375** | **151** |
| **300 153** | **300 153** | Chrysler | Neon II | 99-> | **D** | **456** | **301** | **155** |
| **300 154** | **300 154** | Chrysler | Neon II | 99-> | **T** | **489** | **353** | **136** |
| **E6039G** | **310 016** | Mercedes Benz | Vito / Viano | 96-09 | **D** | **576** | **420** | **156** |
| **E24011G** | **310 021** | Land Rover | Freelander | 11/00-> | **DD** | **524** | **355** | **169** |
| **E24013G** | **310 022** | Land Rover | Freelander | 11/00-> | **DI** | **524** | **355** | **169** |
| **E24010G** | **310 023** | Land Rover | Freelander | 11/00-> | **TD** | **602** | **394** | **208** |
| **E24012G** | **310 024** | Land Rover | Freelander | 11/00-> | **TI** | **602** | **394** | **208** |
| **E14017G** | **310 051** | BMW | M3 (E46) | 00-> | **DI** | **479** | **396** | **83** |
| **E14019G** | **310 052** | BMW | M3 (E46) | 00-> | **DD** | **479** | **396** | **83** |
| **E12310G** | **310 174** | Chrysler | Stratus | 95-99 | **T** | **520** | **340** | **180** |
| **310 202** | **310 202** | Chrysler | Caravan | 01-07 | **D** | **551** | **387** | **164** |
| **E12311G** | **310 206** | Chrysler | Stratus | 95-99 | **D** | **336** | **248** | **88** |
| **E14043G** | **310 273** | BMW | (E60) 525d-525i-530d-530i-535d-540i | 03-> | **DI** | **478** | **295** | **183** |
| **E14045G** | **310 274** | BMW | (E60) 525d-525i-530d-530i-535d-540i | 03-> | **DD** | **478** | **295** | **183** |
| **E14036G** | **310 275** | BMW | Serie 5 (E60) 520-25-30-35-40 | 03-> | **T** | **578** | **388** | **190** |
| **E14025G** | **310 718** | BMW | X3 | 04-> | **DI** | **488** | **369** | **119** |
| **E14027G** | **310 719** | BMW | X3 | 04-> | **DD** | **488** | **369** | **119** |
| **E14032G** | **310 720** | BMW | X3 | 04-> | **T** | **661** | **443** | **218** |
| **-** | **310 764** | Peugeot | Expert Furgon | 99-06 | **DD** | **554** | **391** | **163** |
| **-** | **310 765** | Peugeot | Expert Furgon | 99-06 | **DI** | **554** | **391** | **163** |
| **E14021G** | **310 982** | BMW | BMW serie 1 | 05-> | **DI** | **402** | **240** | **162** |
| **E14023G** | **310 983** | BMW | BMW serie 1 | 05-> | **DD** | **402** | **240** | **162** |
| **E14028G** | **310 984** | BMW | BMW serie 1 | 05-> | **T** | **566** | **403** | **163** |
| **E1034G** | **311 007** | Audi | A3 / Seat León | 03-> | **T** | **579** | **360** | **219** |
| **E1027G** | **311 017** | Audi | A4 (8EC/D) | 05-> | **D** | **622** | **485** | **137** |
| **8078G** | **311 038** | Toyota | Corolla | 92-01 | **TI** | **579** | **385** | **194** |
| **8092G** | **311 039** | Toyota | Corolla | 92-01 | **TD** | **579** | **385** | **194** |
| **311 233** | **311 233** | BMW | X5 30d-35i-50i | 05/00-06 | **T** | **519** | **366** | **153** |
| **E1020G** | **311 346** | VW | Passat nuevo (3C2/ 3C5) | 06/05-> | **T** | **595** | **378** | **217** |
| **E14037G** | **311 403** | BMW | (E90) 316i-318i-320i/d-323i-325i-330i/d-335i | 05-> | **DI** | **403** | **241** | **162** |
| **E14039G** | **311 404** | BMW | (E90) 316i-318i-320i/d-323i-325i-330i/d-335i | 05-> | **DD** | **403** | **241** | **162** |

| Código viejo SACHS | Código nuevo SACHS | Marca | Aplicación | Año | Pos. | Abierto (mm) | Cerrado (mm) | Carrera (mm) |
|---|---|---|---|---|---|---|---|---|
| **1040** | **311 427** | VW | Caddy / Seat Inca 1.9D, 1.9SDI, 1.9TDI | 96-> | **T** | **411** | **272** | **139** |
| **311 645** | **311 645** | Mercedes Benz | Viano nva. | 08/03-> | **D** | **623** | **450** | **173** |
| **E11012G** | **311 753** | Volvo | Volvo XC70 (exc. Nivomat) | 00-> | **T** | **448** | **296** | **152** |
| **311 995** | **311 995** | Mercedes Benz | Clase M (Chasis 163) | 99-06 | **T** | **360** | **324** | **36** |
| **E14317G** | **312 069** | BMW | (E36) 323 Ti Compact | 97-08/00 | **DI** | **504** | **302** | **202** |
| **E14319G** | **312 070** | BMW | (E36) 323 Ti Compact | 97-08/00 | **DD** | **504** | **302** | **202** |
| **E14005G** | **312 252** | BMW | M3 (E36) | 95-99 | **DD** | **541** | **376** | **165** |
| **E14007G** | **312 253** | BMW | M3 (E36) | 95-99 | **DI** | **541** | **376** | **165** |
| **E14041G** | **312 255** | BMW | (E34) 518i-520i | 88-90 | **D** | **583** | **459** | **124** |
| **E1035G** | **312 267** | Audi | A3 / Seat León | 03-> | **D** | **555** | **388** | **167** |
| **E28301G** | **312 278** | Saab | Serie 900 (excepto Cabriolet) | 93-> | **D** | **626** | **444** | **182** |
| **E3096** | **312 305** | Ford | Mondeo | ->96 | **T** | **631** | **396** | **235** |
| **E28303G** | **312 324** | Saab | Serie 9000 (todos) | 93-99 | **D** | **538** | **368** | **170** |
| **E3331G** | **312 330** | Ford | Mondeo Sedan / Rural | 96-12/00 | **D** | **481** | **319** | **162** |
| **E3092G** | **312 339** | Ford | Mondeo | 96-> | **T** | **621** | **396** | **225** |
| **E14309G** | **312 385** | BMW | (E34) 518i-520i-524td-525i-530i-535i Deport. | 88-90 | **D** | **585** | **460** | **125** |
| **E14015G** | **312 393** | BMW | (E34) 520-524td-525i-tds-530i-530 V8-535i-540 V8 | 90-95 | **D** | **585** | **460** | **125** |
| **1315G** | **312 594** | VW | Fox | 04-> | **D** | **512** | **364** | **149** |
| **E1021G** | **312 614** | VW | Vento / Passat nuevo (Ø carter 55mm.) | 06-> | **D** | **555** | **396** | **159** |
| **E1061G** | **312 638** | Audi | Audi A6 | 05-> | **D** | **702** | **547** | **155** |
| **E1066G** | **312 640** | Audi | Audi A6 | 05-> | **T** | **632** | **421** | **211** |
| **312 643** | **312 643** | VW | Tiguan / Audi TT 1.8 - 2.0 - Quattro | 08-> | **D** | **528** | **382** | **146** |
| **E8313G** | **312 675** | Mazda | 323 | 94-08/98 | **DD** | **482** | **330** | **152** |
| **E8311G** | **312 676** | Mazda | 323 | 94-08/98 | **DI** | **482** | **330** | **152** |
| **E28000G** | **312 708** | Saab | 9-5 | 98-> | **T** | **613** | **383** | **230** |
| **E1022G** | **312 783** | Audi | A4 (8E2/ B6) | 01-12/04 | **T** | **600** | **400** | **200** |
| **E3001G** | **312 937** | Ford | Mondeo | 01-02/07 | **D** | **481** | **310** | **171** |
| **E3002G** | **312 939** | Ford | Mondeo | 01-02/07 | **T** | **527** | **372** | **155** |
| **-** | **312 984** | Jeep | Compass / Patriot | 07-> | **DI** | **581** | **420** | **161** |
| **-** | **312 985** | Jeep | Compass / Patriot | 07-> | **DD** | **581** | **420** | **161** |
| **E6021G** | **313 200** | Mercedes Benz | Clase C 180-200-220-280-320-350 (Chasis 204) | 01/07-> | **D** | **578** | **408** | **170** |
| **-** | **313 237** | Nissan | Sentra 2.0 | 10-14 | **DD** | **504** | **350** | **154** |
| **-** | **313 238** | Nissan | Sentra 2.0 | 10-14 | **DI** | **504** | **350** | **154** |
| **313 253** | **313 253** | VW | Tiguan | 08-> | **T** | **634** | **384** | **250** |
| **-** | **313 263** | Jeep | Grand Cherokee | 05-11 | **D** | **485** | **374** | **111** |
| **313 285** | **313 283** | Ford | Focus II | 08-> | **DI** | **477** | **310** | **167** |
| **313 289** | **313 287** | Ford | Focus II | 08-> | **DD** | **477** | **310** | **167** |
| **313 316** | **313 316** | Saab | 9-5 | 09/01-> | **D** | **526** | **348** | **178** |
| **313 364** | **313 364** | Audi | A4 | 08-> | **D** | **525** | **379** | **147** |
| **313 366** | **313 366** | Audi | A4 | 08-> | **T** | **664** | **439** | **225** |
| **E1036G** | **313 367** | Audi | A4 (8EC/D) | 05-> | **T** | **600** | **400** | **200** |
| **313 370** | **313 370** | Audi | TT 1.8 / 2.0 / 3.2 Quattro | 07-> | **T** | **568** | **358** | **210** |
| **E8297G** | **313 401** | Mazda | 323 | 09/98-01 | **DD** | **512** | **337** | **175** |
| **E8299G** | **313 402** | Mazda | 323 | 09/98-01 | **DI** | **512** | **337** | **175** |
| **313 455** | **313 455** | Suzuki | Gand Vitara (JIII) | 09/05-> | **DI** | **581** | **387** | **194** |
| **313 456** | **313 456** | Suzuki | Gand Vitara (JIII) | 09/05-> | **DD** | **581** | **387** | **194** |
| **-** | **313 500** | Ford | Transit | 11/10-> | **D** | **611** | **431** | **180** |
| **3326G** | **313 505** | Ford | Transit modelo nuevo | 01-> | **T** | **609** | **387** | **222** |
| **400 062** | **313 562** | Peugeot | 407 | 04-> | **D** | **517** | **347** | **170** |
| **400 063** | **313 564** | Peugeot | 407 | 04-> | **T** | **470** | **336** | **134** |
| **400 075** | **313 577** | Renault | Laguna II | 01-08 | **D** | **545** | **366** | **179** |
| **313 626** | **313 626** | Mazda | 323 | 09/98-01 | **TD** | **593** | **387** | **206** |

| Código viejo SACHS | Código nuevo SACHS | Marca | Aplicación | Año | Pos. | Abierto (mm) | Cerrado (mm) | Carrera (mm) |
|---|---|---|---|---|---|---|---|---|
| 313 627 | 313 627 | Mazda | 323 | 09/98-01 | TI | 593 | 387 | 206 |
| - | 313 659 | Suzuki | Swift III 1.5 | 07-> | DD | 556 | 393 | 163 |
| - | 313 660 | Suzuki | Swift III 1.5 | 07-> | DI | 556 | 393 | 163 |
| E11003G | 313 665 | Volvo | Volvo S40 II / V50 | 04-> | DD | 480 | 310 | 170 |
| E11005G | 313 667 | Volvo | Volvo S40 II / V50 | 04-> | DI | 480 | 310 | 170 |
| 313 669 | 313 669 | Volvo | S40 II / V50 / C30 | 04-> | T | 690 | 472 | 218 |
| 313 679 | 313 679 | Peugeot | 207 CC / GTI | 08-> | DI | 442 | 290 | 152 |
| 313 681 | 313 681 | Peugeot | 207 CC / GTI | 08-> | DD | 442 | 290 | 152 |
| 313 683 | 313 683 | Peugeot | 207 CC / GTI | 08-> | T | 457 | 318 | 139 |
| 313 748 | 313 748 | Ford | Mondeo | 09/07-> | DI | 461 | 298 | 163 |
| 313 749 | 313 749 | Ford | Mondeo | 09/07-> | DD | 461 | 298 | 163 |
| - | 313 754 | Ford | FORD - Mondeo - Trasero - (07->) | 07-> | T | 479 | 311 | 168 |
| E8095G | 313 806 | Toyota | RAV 4 II | 01-05 | DD | 580 | 396 | 184 |
| E8097G | 313 807 | Toyota | RAV 4 II | 01-05 | DI | 580 | 396 | 184 |
| - | 313 881 | Mitsubishi | Outlander / Outlander Sport | 07/05-> | DD | 531 | 399 | 132 |
| - | 313 882 | Mitsubishi | Outlander / Outlander Sport | 07/05-> | DI | 531 | 399 | 132 |
| 313 901 | 313 901 | Nissan | Tiida | 08-> | DI | 510 | 374 | 136 |
| 313 902 | 313 902 | Nissan | Tiida | 08-> | DD | 510 | 374 | 136 |
| 313 906 | 313 906 | Fiat | Tipo 1.6 - 2.0 / Tempra (Europa) | 88-> | T | 320 | 234 | 86 |
| 313 917 | 313 917 | Honda | Accord / Coupe / Rover 620-623 (93--) | 90-96 | T | 610 | 404 | 206 |
| 313 925 | 313 925 | Alfa Romeo | Mito | 09-> | DI | 504 | 356 | 148 |
| 313 926 | 313 926 | Alfa Romeo | Mito | 09-> | DD | 504 | 356 | 148 |
| 313 929 | 313 929 | BMW | X1 sdrive | 10-> | DI | 501 | 340 | 161 |
| 313 930 | 313 930 | BMW | X1 sdrive | 10-> | DD | 501 | 340 | 161 |
| 313 931 | 313 931 | BMW | X1 xdrive | 10-> | DI | 446 | 290 | 156 |
| 313 932 | 313 932 | BMW | X1 xdrive | 10-> | DD | 446 | 290 | 156 |
| 313 933 | 313 933 | BMW | X1 xdrive / sdrive | 10-> | T | 588 | 430 | 158 |
| 313 962 | 313 962 | Alfa Romeo | Mito | 09-> | T | 613 | 398 | 215 |
| 314 006 | 314 006 | Mercedes Benz | GLK | 09-> | D | 502 | 380 | 122 |
| 314 012 | 314 012 | Kia | Sportage | 05-10 | DD | 546 | 375 | 171 |
| 314 013 | 314 013 | Kia | Sportage | 05-10 | DI | 546 | 375 | 171 |
| 314 014 | 314 014 | Kia | Sportage | 05-10 | TD | 595 | 394 | 201 |
| 314 015 | 314 015 | Kia | Sportage | 05-10 | TI | 595 | 394 | 201 |
| 19015G | 314 028 | Honda | Fit | 05-> | DI | 535 | 360 | 175 |
| 19017G | 314 029 | Honda | Fit | 05-> | DD | 535 | 360 | 175 |
| - | 314 032 | Peugeot | Expert Furgon | 08-13 | DI | 557 | 406 | 151 |
| - | 314 033 | Peugeot | Expert Furgon | 08-13 | DD | 557 | 406 | 151 |
| 314 042 | 314 042 | Renault | Koleos / Nissan X Trail | 07-> | DD | 480 | 398 | 82 |
| 314 043 | 314 043 | Renault | Koleos / Nissan X Trail | 07-> | DI | 480 | 398 | 82 |
| 314 044 | 314 044 | Renault | Koleos / Nissan X Trail | 07-> | T | 517 | 327 | 190 |
| - | 314 049 | Ford | Transit | 11/10-> | T | 639 | 397 | 242 |
| - | 314 125 | Volvo | XC90 | 08-> | D | 573 | 405 | 168 |
| 314 133 | 314 133 | Fiat | Marea / Weekend 1.6 Nafta - 1.9 TD | 98-> | D | 508 | 361 | 147 |
| 314 213 | 314 213 | Audi | Q5 | 09-> | T | 668 | 439 | 229 |
| - | 314 215 | Chery | QQ | 10-> | DD | 471 | 324 | 147 |
| - | 314 216 | Chery | QQ | 10-> | DI | 471 | 324 | 147 |
| 314 421 | 314 421 | Mercedes Benz | Sprinter NCV3 3.8 Tn. | 12-> | D | 440 | 249 | 191 |
| 314 422 | 314 422 | Mercedes Benz | Sprinter NCV3 5.0 Tn. | 12-> | D | 456 | 269 | 187 |
| - | 314 455 | Audi | Q7 | 06-> | DI | 620 | 455 | 165 |
| - | 314 456 | Audi | Q7 | 06-> | DD | 620 | 455 | 165 |
| - | 314 457 | Audi | Q7 | 06-> | T | 569 | 392 | 177 |
| 314 626 | 314 626 | Fiat | Stilo | 03-> | D | 543 | 370 | 173 |

| Código viejo SACHS | Código nuevo SACHS | Marca | Aplicación | Año | Pos. | Abierto (mm) | Cerrado (mm) | Carrera (mm) |
|---|---|---|---|---|---|---|---|---|
| - | 314 663 | Peugeot | Expert Furgon | 08-13 | T | 396 | 294 | 102 |
| 314 683 | 314 683 | Ford | Pick Up F 250 / F350 T.I.B. / F400 | 67-> | D | 405 | 258 | 147 |
| - | 314 695 | Kia | Soul 1.6 | 09->14 | DI | 540 | 382 | 158 |
| - | 314 696 | Kia | Soul 1.6 | 09->14 | DD | 540 | 382 | 158 |
| 314 700 | 314 700 | Ford | Pick Up F 100 T.I.B. | 66-9/92 | D | 445 | 269 | 176 |
| 314 701 | 314 701 | Ford | F100 / F150/ F1000 | 4/92-> | D | 357 | 240 | 117 |
| 314 702 | 314 702 | Ford | F100 / F150/ F1000 | 4/92-> | T | 514 | 316 | 198 |
| 314 703 | 314 703 | Ford | F100 / F150 / F1000 c/ protector | 4/92-> | T | 522 | 318 | 204 |
| 314 704 | 314 704 | Ford | F100 | 99-> | D | 378 | 259 | 119 |
| 314 705 | 314 705 | Ford | F100 | 99-> | T | 697 | 419 | 278 |
| 314 706 | 314 706 | Ford | Ranger 4x2 / 4x4 c/protector | 96-> | T | 680 | 415 | 265 |
| 314 707 | 314 707 | Toyota | Hilux 4x4 c/ protector | 97-> | T | 566 | 346 | 220 |
| 314 717 | 314 717 | Audi | A1 1.2 / 1.4 TFSI | 11-> | D | 510 | 360 | 150 |
| - | 314 720 | Volvo | XC60 | 10-> | DI | 472 | 319 | 153 |
| - | 314 721 | Volvo | XC60 | 10-> | DD | 472 | 319 | 153 |
| 314 753 | 314 753 | Fiat | Stilo | 03-> | T | 645 | 393 | 252 |
| 314 766 | 314 766 | GMC | Aveo | 08-> | DI | 511 | 354 | 157 |
| 314 767 | 314 767 | GMC | Aveo | 08-> | DD | 511 | 354 | 157 |
| 314 839 | 314 839 | Fiat | 500 / 500C | 11-> | DI | 540 | 385 | 155 |
| 314 843 | 314 843 | Fiat | 500 / 500C | 11-> | T | 370 | 251 | 119 |
| 314 845 | 314 845 | Toyota | RAV 4 | 06-12 | DD | 538 | 369 | 169 |
| 314 846 | 314 846 | Toyota | RAV 4 | 06-12 | DI | 538 | 369 | 169 |
| - | 314 849 | Peugeot | 508 | 12-> | T | 454 | 336 | 118 |
| 314 860 | 314 860 | Ford | Ka línea nueva | 08-> | D | 480 | 298 | 182 |
| 314 863 | 314 863 | Toyota | RAV 4 | 06-12 | T | 413 | 293 | 120 |
| - | 314 878 | BMW | X3 | 03/12-> | DI | 535 | 398 | 137 |
| - | 314 879 | BMW | X3 | 03/12-> | DD | 535 | 398 | 137 |
| 314 883 | 314 883 | VW | Sharan | 11-> | D | 556 | 395 | 161 |
| - | 314 892 | Hyundai | H1 | 08-> | DI | 561 | 389 | 172 |
| - | 314 893 | Hyundai | H1 | 08-> | DD | 561 | 389 | 172 |
| 314 898 | 314 898 | Renault | Megane II | 05-> | D | 519 | 341 | 178 |
| 314 906 | 314 906 | Alfa Romeo | 156 2,0 - JTD - V6 - 2,5V6 24V | 09/97-> | D | 472 | 359 | 113 |
| 314 994 | 314 994 | Hyundai | Tucson | 07-10 | DI | 545 | 374 | 171 |
| 314 995 | 314 995 | Hyundai | Tucson | 07-10 | DD | 545 | 374 | 171 |
| - | 314 996 | Hyundai | Tucson | 07-10 | TI | 593 | 392 | 201 |
| - | 314 997 | Hyundai | Tucson | 07-10 | TD | 593 | 392 | 201 |
| - | 314 998 | GM | Spark 1.0 | 08-> | DI | 470 | 330 | 140 |
| - | 314 999 | GM | Spark 1.0 | 08-> | DD | 470 | 330 | 140 |
| - | 315 091 | Audi | Q3 | 10/12-> | D | 525 | 396 | 129 |
| - | 315 125 | Fiat | Qubo Active / Dynamic / Fiorino Qubo | 12-> | DI | 527 | 351 | 176 |
| - | 315 126 | Fiat | Qubo Active / Dynamic / Fiorino Qubo | 12-> | DD | 527 | 351 | 176 |
| - | 315 132 | Fiat | Qubo Active / Dynamic / Fiorino Qubo | 12-> | T | 467 | 306 | 161 |
| 315 139 | 315 139 | Peugeot | 308 CC | 10-> | T | 634 | 400 | 234 |
| - | 315 220 | Hyundai | i10 / Kia Picanto | 10-> | DI | 501 | 337 | 164 |
| - | 315 221 | Hyundai | i10 / Kia Picanto | 10-> | DD | 501 | 337 | 164 |
| 315 223 | 315 223 | GMC | Agile | 09-> | D | 517 | 354 | 163 |
| 315 224 | 315 224 | GMC | Agile | 09-> | T | 464 | 282 | 182 |
| 315 225 | 315 225 | Honda | Civic | 06-11 | DI | 510 | 343 | 167 |
| 315 226 | 315 226 | Honda | Civic | 06-11 | DD | 510 | 343 | 167 |
| 315 227 | 315 227 | Honda | Civic | 06-11 | T | 557 | 373 | 184 |
| 315 228 | 315 228 | Ford | Focus II | 08-> | T | 706 | 572 | 134 |
| 315 229 | 315 229 | VW | Amarok | 09-> | D | 611 | 489 | 122 |

| Código viejo SACHS | Código nuevo SACHS | Marca | Aplicación | Año | Pos. | Abierto (mm) | Cerrado (mm) | Carrera (mm) |
|---|---|---|---|---|---|---|---|---|
| 315 230 | 315 230 | VW | Amarok | 09-> | T | 582 | 364 | 218 |
| 315 231 | 315 231 | Peugeot | 308 / 408 | 11-> | DI | 517 | 338 | 179 |
| 315 232 | 315 232 | Peugeot | 308 / 408 | 11-> | DD | 517 | 338 | 179 |
| 315 233 | 315 233 | Peugeot | 308 / 408 | 11-> | T | 652 | 428 | 224 |
| 315 236 | 315 236 | Renault | Logan / Sandero | 08-> | D | 524 | 361 | 163 |
| - | 315 267 | Mercedes Benz | Clase A (W176) / Clase B (W246) | 05/13-> | DI | 538 | 371 | 167 |
| - | 315 268 | Mercedes Benz | Clase A (W176) / Clase B (W246) | 05/13-> | DD | 538 | 371 | 167 |
| - | 315 269 | Mercedes Benz | Clase A (W176) / Clase B (W246) | 05/13-> | T | 627 | 447 | 180 |
| 315 288 | 315 288 | Fiat | Strada Adventure / Palio Adventure Locker | 08-> | D | 583 | 398 | 185 |
| 315 289 | 315 289 | Fiat | Strada Adventure | 08-> | T | 430 | 270 | 160 |
| 315 293 | 315 293 | Mercedes Benz | Clase B | 05-11 | D | 553 | 375 | 178 |
| - | 315 306 | Hyundai | Santa Fe I | 01-06 | DI | 586 | 417 | 169 |
| - | 315 307 | Hyundai | Santa Fe I | 01-06 | DD | 586 | 417 | 169 |
| 315 312 | 315 312 | BMW | X5 / X6 30d-35i | 07-> | D | 559 | 407 | 152 |
| 315 315 | 315 315 | BMW | X5 / X6 30d-35i | 07-> | TI | 541 | 383 | 158 |
| 315 316 | 315 316 | BMW | X5 / X6 30d-35i | 07-> | TD | 541 | 383 | 158 |
| 315 317 | 315 317 | Fiat | Idea Adventure | 11-> | D | 569 | 410 | 159 |
| 315 318 | 315 318 | Fiat | Idea Adventure | 11-> | T | 670 | 432 | 238 |
| 315 328 | 315 328 | Renault | Sandero Stepway | 09-> | D | 562 | 397 | 165 |
| 315 329 | 315 329 | Renault | Sandero Stepway | 09-> | T | 654 | 424 | 230 |
| - | 315 372 | Fiat | Doblò Active / Cargo | 10/12-> | DI | 532 | 379 | 153 |
| - | 315 373 | Fiat | Doblò Active / Cargo | 10/12-> | DD | 532 | 379 | 153 |
| 315 378 | 315 378 | VW | Saveiro | 10-> | D | 537 | 380 | 157 |
| 315 379 | 315 379 | VW | Saveiro | 10-> | T | 661 | 419 | 242 |
| 315 380 | 315 380 | Honda | City | 11-> | DI | 542 | 349 | 193 |
| 315 381 | 315 381 | Honda | City | 11-> | DD | 542 | 349 | 193 |
| 315 382 | 315 382 | Honda | City | 11-> | T | 605 | 393 | 212 |
| 315 383 | 315 383 | GMC | Montana | 10-> | T | 426 | 278 | 148 |
| 315 384 | 315 384 | Fiat | Punto / Línea | 05-> | DI | 528 | 350 | 178 |
| 315 385 | 315 385 | Fiat | Punto / Línea | 05-> | DD | 528 | 350 | 178 |
| 315 386 | 315 386 | Fiat | Uno / Palio / Grand Siena | 11-> | DI | 550 | 374 | 176 |
| 315 387 | 315 387 | Fiat | Uno / Palio / Grand Siena | 11-> | DD | 550 | 374 | 176 |
| 315 388 | 315 388 | Fiat | Uno / Palio / Grand Siena | 11-> | T | 583 | 378 | 205 |
| - | 315 441 | Citroën | DS3 | 12/10-> | DI | 443 | 284 | 159 |
| - | 315 442 | Citroën | DS3 | 12/10-> | DD | 443 | 284 | 159 |
| - | 315 454 | Citroën | DS3 | 12/10-> | T | 436 | 306 | 130 |
| - | 315 463 | Fiat | Doblò Active / Cargo | 10/12-> | T | 574 | 361 | 213 |
| 315 464 | 315 464 | Fiat | 500 / 500C | 11-> | DD | 540 | 385 | 155 |
| 315 465 | 315 465 | Mercedes Benz | Sprinter NCV3 5.0 Tn. | 12-> | T | 520 | 330 | 190 |
| 315 466 | 315 466 | Mercedes Benz | Sprinter NCV3 3.8 Tn. | 12-> | T | 503 | 318 | 185 |
| 315 467 | 315 467 | Ford | Ranger 4x2 / 4x4 | 12-> | D | 492 | 405 | 87 |
| 315 468 | 315 468 | Ford | Ranger 4x2 / 4x4 | 12-> | T | 622 | 380 | 242 |
| - | 315 477 | GMC | Cruze | 11-> | DI | 555 | 382 | 173 |
| - | 315 478 | GMC | Cruze | 11-> | DD | 555 | 382 | 173 |
| 315 482 | 315 482 | GMC | Cruze | 11-> | T | 651 | 400 | 251 |
| 5012G | 315 525 | GMC | Aveo | 08-> | T | 595 | 355 | 240 |
| - | 315 526 | Mercedes Benz | Clase M (W164) | 11/07-> | D | 752 | 627 | 125 |
| 315 533 | 315 533 | Nissan | Tiida | 08-> | T | 575 | 370 | 205 |
| 315 562 | 315 562 | GMC | S-10 Pick Up | 03/12-> | D | 487 | 358 | 129 |
| 315 563 | 315 563 | GMC | S-10 Pick Up | 03/12-> | T | 530 | 329 | 201 |
| 315 564 | 315 564 | Ford | Fiesta Kinetic | 11-> | T | 672 | 421 | 251 |
| 315 362 | 315 565 | Renault | Duster 4x2 | 11-> | T | 668 | 420 | 248 |

| Código viejo SACHS | Código nuevo SACHS | Marca | Aplicación | Año | Pos. | Abierto (mm) | Cerrado (mm) | Carrera (mm) |
|---|---|---|---|---|---|---|---|---|
| 311 647 | 315 572 | Mercedes Benz | Viano nueva | 08/03-> | T | 391 | 271 | 120 |
| - | 315 641 | Dodge | Journey | 08-> | DI | 479 | 295 | 184 |
| - | 315 642 | Dodge | Journey | 08-> | DD | 479 | 295 | 184 |
| 6301G | 315 700 | Mercedes Benz | Sprinter Kombi / Pick up y Furgon | <-> | D | 527 | 345 | 182 |
| 6313G | 315 701 | Mercedes Benz | Sprinter Pick up 4,6t. (largo) | 12/00-> | D | 558 | 375 | 183 |
| 6012 | 315 767 | Mercedes Benz | Sprinter Pick Up / Furgon 3,5t | <-> | T | 522 | 322 | 200 |
| - | 315 774 | GMC | Cobalt / Onix / Prisma / Spin / Sonic | 11-> | T | 651 | 390 | 261 |
| - | 315 777 | Renault | Clio Mío | 12-> | D | 462 | 336 | 126 |
| - | 315 851 | Peugeot | 3008 | 10-> | DI | 513 | 345 | 168 |
| - | 315 852 | Peugeot | 3008 | 10-> | DD | 513 | 345 | 168 |
| - | 315 853 | Peugeot | 3008 | 10-> | T | 649 | 426 | 223 |
| E11010G | 315 854 | Volvo | Volvo S60 / S80 | 98-> | T | 455 | 296 | 159 |
| - | 315 869 | BMW | Serie 1 (F20) / Serie 3 (F30) | 13-> | D | 466 | 292 | 174 |
| - | 315 872 | BMW | Serie 1 (F20) / Serie 3 (F30) | 13-> | T | 538 | 377 | 161 |
| - | 315 879 | Ford | Ecosport Kinetic | 13-> | DI | 542 | 376 | 166 |
| - | 315 880 | Ford | Ecosport Kinetic | 13-> | DD | 542 | 376 | 166 |
| - | 315 881 | Ford | Ecosport Kinetic | 13-> | T | 734 | 488 | 246 |
| - | 315 882 | GMC | Cobalt / Onix / Prisma / Spin / Sonic | 11-> | DI | 526 | 355 | 171 |
| - | 315 883 | GMC | Cobalt / Onix / Prisma / Spin / Sonic | 11-> | DD | 526 | 355 | 171 |
| - | 315 892 | Nissan | Sentra | 14-> | DI | 503 | 351 | 152 |
| - | 315 893 | Nissan | Sentra | 14-> | DD | 503 | 351 | 152 |
| - | 315 922 | Ford | Fiesta Kinetic | 11-> | DI | 510 | 339 | 171 |
| - | 315 923 | Ford | Fiesta Kinetic | 11-> | DD | 510 | 339 | 171 |
| - | 315 947 | Toyota | Corolla | 08-03/14 | DI | 520 | 339 | 181 |
| - | 315 948 | Toyota | Corolla | 08-03/14 | DD | 520 | 339 | 181 |
| - | 315 949 | Toyota | Corolla | 08-03/14 | T | 476 | 305 | 171 |
| - | 315 956 | Citroën | C3 Picasso / C3 Aircross / New C3 | 10-> | T | 492 | 322 | 170 |
| - | 315 957 | Peugeot | 208 (todos) | 05/13-> | T | 509 | 323 | 186 |
| 1007G | 316 001 | VW | Passat | 01-05 | D | 593 | 475 | 118 |
| 1008G | 316 002 | VW | Vento | 06-> | T | 586 | 349 | 237 |
| 1016 | 316 005 | VW | 1500-1.8 / 1500-1.8 Rural (todos) | 71-> | T | 466 | 289 | 177 |
| 1028 | 316 006 | VW | Saveiro 1.6/ 1.8 | ->98 | T | 621 | 387 | 234 |
| 1046G | 316 012 | VW | Golf III TDI-GL Nafta / Seat Toledo | ->99 | T | 639 | 426 | 213 |
| 1048G | 316 013 | VW | Saveiro | 06-> | T | 590 | 370 | 220 |
| 1052G | 316 014 | VW | Polo Classic / Seat Cordoba / Ibiza | 96-> | T | 553 | 371 | 182 |
| 1064G | 316 015 | VW | Golf IV / New Beetle / Bora / Audi A3 / Seat Toledo | 99-> | T | 668 | 457 | 211 |
| 1068G | 316 016 | Audi | Audi A4 / A6 / VW Passat | 97-> | T | 627 | 418 | 209 |
| 1076 | 316 017 | VW | Saveiro mod. nuevo | 98-> | T | 574 | 368 | 206 |
| 1094G | 316 018 | VW | Cross Fox | 05-> | T | 696 | 430 | 267 |
| 12003G | 316 019 | Chrysler | Cherokee / Grand Cherokee 4x2 y 4x4 / Wrangler | <-> | D | 544 | 333 | 211 |
| 12004G | 316 020 | Jeep | Cherokee Sport 2WD / 4WD | 91-01 | T | 532 | 346 | 186 |
| 12007G | 316 021 | Dodge | RAM 2500 4x4 | 04-> | D | 592 | 363 | 230 |
| 12008G | 316 022 | Dodge | RAM 2500 4x4 | 04-> | T | 698 | 439 | 259 |
| 1305 | 316 023 | VW | 1500-1.8 / 1500-1.8 Rural (todos) | 78-> | D | 534 | 370 | 164 |
| 1307G | 316 024 | VW | Cross Fox | 05-> | D | 549 | 387 | 162 |
| 1312 | 316 025 | VW | Gacel / Senda | <-> | T | 589 | 375 | 214 |
| 1318 | 316 026 | VW | Gol | ->95 | T | 588 | 375 | 213 |
| 1345G | 316 027 | Audi | Audi A4 / A6/ VW Passat | 97-> | D | 595 | 475 | 120 |
| 1353G | 316 028 | VW | Golf IV/ New Beetle / Bora / Audi A3 / Seat Toledo | 99-> | D | 526 | 347 | 179 |
| 19004G | 316 029 | Honda | Fit | 05-> | T | 519 | 328 | 191 |
| 2005G | 316 031 | Fiat | Idea / Punto | 05-> | D | 552 | 388 | 164 |
| 2007G | 316 032 | Fiat | Ducato 1.8Tn | 07-> | D | 685 | 520 | 165 |

| Código viejo SACHS | Código nuevo SACHS | Marca | Aplicación | Año | Pos. | Abierto (mm) | Cerrado (mm) | Carrera (mm) |
|---|---|---|---|---|---|---|---|---|
| 2014G | 316 033 | Fiat | Idea / Punto | 05-> | T | 638 | 394 | 244 |
| 2032G | 316 036 | Fiat | Palio Weekend / Marea (todos) / Bravo | <-> | T | 320 | 234 | 86 |
| 2040 | 316 037 | Fiat | Ducato / Peugeot Boxer | 96-> | T | 490 | 318 | 172 |
| 2044G | 316 038 | Fiat | Fiorino Uno-Duna (Furgon y Pick up) | 96-> | T | 402 | 245 | 157 |
| 2064/4 | 316 039 | Fiat | Ducato 1.8Tn | 07-> | T | 473 | 314 | 159 |
| 22006 | 316 040 | Mitsubishi | L 200 4x4 Cab.simple / doble | <-> | T | 619 | 374 | 245 |
| 2301 | 316 041 | Fiat | 128 Europa / Super Europa | <-> | D | 517 | 372 | 145 |
| 2302 | 316 042 | Fiat | 128 Europa / Super Europa | <-> | T | 560 | 359 | 201 |
| 2303 | 316 043 | Fiat | 147- Spazio-Vivace/ Fiorino 147- (Furgon y Pick Up) | <-> | D | 484 | 342 | 142 |
| 2304 | 316 044 | Fiat | 147- Spazio-Vivace | <-> | T | 542 | 350 | 192 |
| 23043/3G | 316 045 | Nissan | Frontier 4x4 | 03-> | D | 295 | 205 | 91 |
| 2306 | 316 047 | Fiat | Regatta 85-100S / S-SC-2000 / Weekend Motor Tipo | <-> | T | 581 | 359 | 222 |
| 2311 | 316 048 | Fiat | Duna (nafta/diesel) Sedan y Weekend / Uno | ->92 | D | 521 | 379 | 142 |
| 2312 | 316 049 | Fiat | Duna (nafta/diesel) Sedan y Weekend / Uno | ->92 | T | 585 | 375 | 210 |
| 2313G | 316 050 | Fiat | Duna Sedan-Weekend / Fiorino Uno / Uno | 92-> | D | 521 | 379 | 142 |
| 2315 | 316 051 | Fiat | Regatta S-SC-2000 / Weekend Motor Tipo | 91-> | D | 528 | 372 | 156 |
| 2317G | 316 052 | Fiat | Palio / Siena modelo nuevo | 01-> | D | 546 | 385 | 161 |
| 2318G | 316 053 | Fiat | Duna (nafta/diesel) Sedan y Weekend / Uno | 92-04/98 | T | 585 | 375 | 210 |
| 2329G | 316 054 | Fiat | Palio Sedan y Weekend / Siena | ->00 | D | 537 | 369 | 168 |
| 2330G | 316 055 | Fiat | Palio / Siena | <-> | T | 520 | 315 | 205 |
| 2341G | 316 056 | Fiat | Tipo 1.6 - 2.0 / Tempra (Europa) | 88-> | D | 536 | 342 | 194 |
| 2364G | 316 057 | Fiat | Uno | 05/98-> | T | 585 | 376 | 209 |
| 3003 | 316 060 | Ford | Falcon / Sprint / Rural / Pick Up Ranchero | <-> | D | 351 | 225 | 126 |
| 3004 | 316 061 | Ford | Falcon / Sprint / Rural | <-> | T | 440 | 269 | 171 |
| 3005 | 316 062 | Ford | Taunus Berlina y Coupe | <-> | D | 350 | 230 | 120 |
| 3006 | 316 063 | Ford | Taunus Berlina y Coupe | <-> | T | 498 | 312 | 186 |
| 3014G | 316 067 | Ford | Pick Up F100 | 03-> | T | 595 | 362 | 233 |
| 3015 | 316 068 | Ford | F100 | 61-65 | D | 616 | 366 | 250 |
| 3017 | 316 069 | Ford | Pick Up F 100 T.I.B. | 66-9/92 | D | 446 | 268 | 178 |
| 3017/3 | 316 070 | Ford | Pick Up F 100 T.I.B. | 66-9/92 | D | 446 | 268 | 178 |
| 3018 | 316 071 | Ford | Pick Up F 100 T.I.B. / Pick up mazda 4x2 (--91) | 66-8/73 | T | 498 | 312 | 186 |
| 3018/3 | 316 072 | Ford | Pick Up F 100 T.I.B. / P. up Mazda 4x2 (--91) | 66-8/73 | T | 498 | 312 | 186 |
| 3020 | 316 073 | Ford | Pick Up F 100 T.I.B. | 9/73-9/92 | T | 472 | 292 | 180 |
| 3020/3 | 316 074 | Ford | Pick Up F 100 T.I.B. | 9/73-9/92 | T | 472 | 292 | 180 |
| 3023/3 | 316 075 | Ford | Pick Up F 250 / F350 T.I.B./ F400 | 67-> | D | 405 | 257 | 148 |
| 3024/3 | 316 076 | Ford | Pick Up F 250 / 350 T.I.B. | 67-> | T | 511 | 322 | 189 |
| 3029/3G | 316 077 | Ford | F100 4x4 | 06-> | D | 580 | 361 | 219 |
| 3030/3G | 316 078 | Ford | F100 4x4 | 06-> | T | 698 | 420 | 278 |
| 3032G | 316 079 | Ford | Ka línea nueva | 08-> | T | 711 | 436 | 275 |
| 3039 | 316 080 | Isuzu | Trooper 4x4 / Hyundai H1 | 92-> | D | 390 | 259 | 131 |
| 3050 | 316 081 | Ford | Sierra XR4 / L-Ghia-GLX (13") (--86) / Ghia S-GL (14") | <-> | T | 657 | 396 | 261 |
| 3055/3 | 316 082 | Ford | Pick Up F 150 4x4 | <-> | D | 370 | 247 | 123 |
| 3056/3 | 316 083 | Ford | Pick Up F 150 4x4 | <-> | T | 595 | 360 | 235 |
| 3059 | 316 084 | Ford | F100 / F150 / F1000 | 4/92-> | D | 359 | 233 | 126 |
| 3059/3 | 316 085 | Ford | F100 / F150 / F1000 | 4/92-> | D | 359 | 233 | 126 |
| 3060G | 316 086 | Ford | Galaxy / VW Carat (--92) / Santana | 92-> | T | 588 | 372 | 216 |
| 3062 | 316 087 | Ford | F100 / F150 / F1000 | 4/92-> | T | 510 | 309 | 201 |
| 3062/3 | 316 088 | Ford | F100 / F150 / F1000 | 4/92-> | T | 510 | 309 | 201 |
| 3064G | 316 089 | Ford | Escort 1.6 y 1.8 (plataforma Orion) / Orion / Pointer | <-> | T | 606 | 387 | 219 |
| 3065/3 | 316 090 | Ford | Pick Up F 4000 | <-> | D | 410 | 257 | 153 |
| 3066/3 | 316 091 | Ford | Pick Up F 4000 | <-> | T | 598 | 363 | 235 |

| Código viejo SACHS | Código nuevo SACHS | Marca | Aplicación | Año | Pos. | Abierto (mm) | Cerrado (mm) | Carrera (mm) |
|---|---|---|---|---|---|---|---|---|
| 3068 | 316 092 | Ford | Fiesta con y sin barra estabilizadora | ->96 | T | 680 | 434 | 246 |
| 3077/3G | 316 093 | Ford | Ranger y Explorer 4x2 / 4x4 | 96-> | D | 455 | 344 | 111 |
| 3080G | 316 094 | Ford | Escort 1.8 (16 v) Zetec y diesel (exc. coupe y cabrio) | 97-> | T | 633 | 440 | 193 |
| 3082G | 316 095 | Ford | Fiesta Zetec y Diesel | 96-> | T | 681 | 425 | 256 |
| 3084G | 316 096 | Ford | Ka | 97-> | T | 690 | 430 | 260 |
| 3088/3 | 316 097 | Ford | Explorer 4x2 / 4x4 | 95-> | T | 650 | 390 | 260 |
| 3098G | 316 099 | Ford | Courier Van | 97-> | T | 435 | 377 | 58 |
| 3102 | 316 100 | Ford | Escort 1.8 (16 v) Zetec y diesel Rural | 97-> | T | 477 | 314 | 163 |
| 3103G | 316 101 | Ford | F100 | 99-> | D | 380 | 255 | 125 |
| 3104 | 316 102 | Ford | F100 | 99-> | T | 698 | 418 | 280 |
| 3106/3G | 316 103 | Ford | Ranger 4x2 / 4x4 | 96-> | T | 679 | 407 | 272 |
| 3112G | 316 104 | Ford | Focus | 99-> | T | 649 | 430 | 219 |
| 3301 | 316 105 | Ford | Sierra Ghia "S"-GL (Rodado 14") / Rural (Rodado 14") | 6/86-> | D | 526 | 364 | 162 |
| 3303 | 316 106 | Ford | Escort 1.6 (todos, incl.XR3 1.8 Cabrio) | ->96 | D | 494 | 351 | 143 |
| 3304 | 316 107 | Ford | Escort 1.6 (incl. XR3 1.8 Cabrio) / 1.8 XR3 Coupe | ->96 | T | 561 | 363 | 198 |
| 3307G | 316 108 | Ford | Galaxy / VW Carat (--92) | 92-> | D | 555 | 370 | 185 |
| 3311G | 316 109 | Ford | Escort 1.6 y 1.8 (plataforma Orion) / Orion / Pointer | <-> | D | 499 | 318 | 181 |
| 3313 | 316 110 | Ford | Fiesta (todos) | ->96 | D | 508 | 347 | 161 |
| 3319G | 316 111 | Ford | EcoSport | 03-> | D | 545 | 380 | 165 |
| 3321G | 316 112 | Ford | Escort 1.8 Zetec y diesel / Coupe / Cabrio / Rural | 97-99 | D | 492 | 333 | 159 |
| 3323G | 316 113 | Ford | Courier Van / Fiesta Zetec y Diesel | 97-> | D | 481 | 330 | 151 |
| 3325G | 316 114 | Ford | Ka | 97-> | D | 490 | 350 | 140 |
| 3327G | 316 116 | Ford | Transit 120 / 190 (incl. minibus) | 97-> | D | 547 | 372 | 175 |
| 3335G | 316 117 | Ford | Focus | 99-> | DD | 522 | 361 | 161 |
| 3337G | 316 118 | Ford | Escort 1.8 Zetec y diesel / Coupe / Cabrio/ Rural | 99-> | D | 489 | 333 | 156 |
| 3339G | 316 119 | Ford | Focus | 99-> | DI | 522 | 361 | 161 |
| 4006G | 316 122 | Renault | Megane II | 05-> | T | 489 | 336 | 153 |
| 4010G | 316 123 | Renault | Logan / Sandero | 08-> | T | 614 | 370 | 244 |
| 4017 | 316 124 | Renault | R4L- R4F- R4S- R4- R6 | 70-> | D | 338 | 225 | 113 |
| 4018 | 316 125 | Renault | R4L- R4F- R4S- R4- R6 | 70-> | T | 411 | 270 | 141 |
| 4032 | 316 126 | Jeep | Jeep | ->73 | T | 498 | 312 | 186 |
| 4033 | 316 127 | Jeep | Jeep | ->73 | D | 437 | 284 | 153 |
| 4035G | 316 128 | Renault | Master Corto / Largo | 99-> | D | 412 | 318 | 94 |
| 4046 | 316 129 | Renault | R18 1400-1600-2000-Berlina y Break | <-> | T | 623 | 390 | 233 |
| 4052 | 316 130 | Renault | R9 y R 11 | <-> | T | 545 | 340 | 205 |
| 4054 | 316 131 | Renault | R12 GTL | 90-> | T | 631 | 390 | 241 |
| 4056 | 316 132 | Renault | Traffic Confort / Standard | 86-> | T | 597 | 360 | 237 |
| 4060G | 316 133 | Renault | R19 (todos) | <-> | T | 531 | 335 | 196 |
| 4062G | 316 134 | Renault | R21 - Alize - Nevada | <-> | T | 463 | 352 | 111 |
| 4068 | 316 135 | Renault | Express (todos) | <-> | T | 386 | 328 | 58 |
| 4070G | 316 136 | Renault | Clio 1,6 RL/ RT/ Diesel (todos) | ->12/99 | T | 342 | 281 | 61 |
| 4076G | 316 137 | Renault | Megane Scenic | 98-> | T | 479 | 406 | 73 |
| 4078 | 316 138 | Renault | Kangoo Kombi | 98-> | T | 420 | 345 | 75 |
| 4078 | 316 138 | Renault | Kangoo Furgon | 98-> | T | 420 | 345 | 75 |
| 4086G | 316 139 | Renault | Twingo | <-> | T | 685 | 426 | 259 |
| 4094G | 316 140 | Renault | Megane / Megane serie II / Coupe | 96-> | T | 468 | 395 | 73 |
| 4096G | 316 141 | Renault | Master Corto / Largo | 99-> | T | 550 | 344 | 206 |
| 4301 | 316 142 | Renault | R12 GTL / R12 L-TS-TL-Break | <-> | D | 438 | 326 | 112 |
| 4301i | 316 143 | Renault | R12 GTL / R12 L-TS-TL- Break sin accesorios | <-> | D | 438 | 326 | 112 |
| 4303i | 316 144 | Renault | R18 2000 Berlina y Break sin accesorios | ->84 | D | 450 | 334 | 116 |
| 4305i | 316 145 | Renault | R18 1400 sin accesorios | ->84 | D | 450 | 334 | 116 |

| Código viejo SACHS | Código nuevo SACHS | Marca | Aplicación | Año | Pos. | Abierto (mm) | Cerrado (mm) | Carrera (mm) |
|---|---|---|---|---|---|---|---|---|
| **4309G** | **316 146** | Renault | R9 y R 11 | <-> | **D** | **515** | **343** | **172** |
| **4311i** | **316 147** | Renault | R18 1600 / 2000-1400 sin accesorios | <-> | **D** | **450** | **334** | **116** |
| **4315** | **316 148** | Renault | Traffic Standard (Carter Corto 277,3 mm) | 86-> | **D** | **624** | **445** | **179** |
| **4317** | **316 149** | Renault | Traffic Confort (Carter Largo 297,3 mm) | 86-> | **D** | **624** | **463** | **161** |
| **4319G** | **316 150** | Renault | R19 | ->6/99 | **D** | **538** | **342** | **196** |
| **4335** | **316 151** | Renault | Clio 1,6 RL / RT | 96->3/99 | **D** | **546** | **375** | **171** |
| **4337G** | **316 152** | Renault | Twingo | <-> | **D** | **445** | **294** | **151** |
| **4339G** | **316 153** | Renault | Clio II 1.2 | 03-> | **D** | **520** | **330** | **190** |
| **4351G** | **316 154** | Renault | Megane / Megane serie II / Coupe / Scenic (origen Brasil) | 96-> | **D** | **528** | **362** | **166** |
| **4355G** | **316 155** | Renault | Kangoo Express / Kombi | 98-> | **D** | **535** | **374** | **161** |
| **4359G** | **316 156** | Renault | R19 | 6/99-> | **D** | **521** | **326** | **195** |
| **4361** | **316 157** | Renault | Express | 97-> | **D** | **533** | **366** | **167** |
| **4363** | **316 158** | Renault | Clio 1,4 Energy / 1,9 Diesel (plato bajo) | ->03/99 | **D** | **507** | **331** | **176** |
| **4365G** | **316 159** | Renault | Laguna / Nevada | 95-> | **D** | **505** | **327** | **178** |
| **4379** | **316 160** | Renault | Clio 1,6 RL / RT/ Diesel | 3/99-> | **D** | **537** | **376** | **161** |
| **4381G** | **316 161** | Renault | Clio 1.6 y 1.9 D (Serie II) | 12/99-> | **D** | **524** | **336** | **188** |
| **5006G** | **316 162** | GMC | Meriva | 03-> | **T** | **410** | **269** | **141** |
| **5010G** | **316 163** | GMC | Zafira | 01-> | **T** | **410** | **266** | **145** |
| **5017/3** | **316 165** | GMC | Pick Up C10-P10-P20 | 63-6/73 | **D** | **363** | **243** | **120** |
| **5018** | **316 166** | GMC | Pick Up C10-P10-P20 | 63-6/73 | **T** | **527** | **326** | **201** |
| **5019/3** | **316 168** | GMC | Pick Up C10-P10-P20 | 7/73-79 | **D** | **363** | **243** | **120** |
| **5020** | **316 169** | GMC | Pick Up C10-P10-P20 | 7/73-79 | **T** | **554** | **341** | **213** |
| **5033/3** | **316 170** | GMC | Pick Up C10 Sevel | 85-3/89 | **D** | **367** | **245** | **122** |
| **5034** | **316 171** | GMC | Pick Up C10 Sevel | 85-3/89 | **T** | **572** | **351** | **221** |
| **5051/3** | **316 172** | GMC | Pick Up D20 C20 | 90-> | **D** | **371** | **250** | **121** |
| **5052/3** | **316 173** | GMC | Pick Up D20 C20 | 90-> | **T** | **532** | **330** | **202** |
| **5059** | **316 174** | GMC | Blazer - S10 4x2 | 93-> | **D** | **412** | **284** | **128** |
| **5059/3** | **316 175** | GMC | Blazer - S10 4x2 | 93-> | **D** | **418** | **283** | **135** |
| **5061/3** | **316 176** | GMC | Silverado / Grand Blazer | 96-> | **D** | **365** | **247** | **118** |
| **5076** | **316 177** | GMC | Blazer - S10 4x2/ S10 4x4 | 93-> | **T** | **645** | **388** | **257** |
| **5076/3** | **316 178** | GMC | Blazer - S10 4x2 / S10 4x4 | 93-> | **T** | **645** | **388** | **257** |
| **5078/3** | **316 179** | GMC | Silverado / Grand Blazer | 96-> | **T** | **540** | **339** | **201** |
| **5088G** | **316 180** | GMC | Vectra | 96-> | **T** | **595** | **371** | **224** |
| **5094** | **316 181** | GMC | Corsa Combo Van y Pick up | 97-> | **T** | **434** | **287** | **148** |
| **5105/3** | **316 182** | GMC | Blazer - S10 4x4 | 93-> | **D** | **410** | **293** | **117** |
| **5110G** | **316 183** | GMC | Astra Sedan GL / GLS (mod. nuevo) | 98-> | **T** | **387** | **256** | **131** |
| **5305G** | **316 185** | GMC | Kadett / Ipanema | 91-> | **D** | **501** | **349** | **152** |
| **5309G** | **316 186** | GMC | Vectra | 96-> | **DI** | **524** | **360** | **164** |
| **5311G** | **316 187** | GMC | Vectra | 96-> | **DD** | **524** | **360** | **164** |
| **5319G** | **316 188** | GMC | Astra Sedan GL / GLS (mod. nuevo) | 98-> | **DI** | **524** | **339** | **185** |
| **5321G** | **316 189** | GMC | Astra Sedan GL / GLS (mod. nuevo) | 98-> | **DD** | **524** | **339** | **185** |
| **6013/3** | **316 190** | Mercedes Benz | MB 180 D Kombi reforz. | <-> | **D** | **448** | **295** | **153** |
| **6036** | **316 192** | Mercedes Benz | Sprinter 413 4,6 t. (modelo nuevo) | 02-> | **T** | **515** | **325** | **190** |
| **6307G** | **316 193** | Mercedes Benz | Clase A | <-> | **D** | **515** | **353** | **162** |
| **7002G** | **316 201** | Peugeot | 307 | <-> | **T** | **642** | **414** | **228** |
| **7003G** | **316 202** | Peugeot | 307 | <-> | **DI** | **518** | **344** | **174** |
| **7005G** | **316 203** | Peugeot | 307 | <-> | **DD** | **518** | **344** | **174** |
| **7010** | **316 204** | Peugeot | 404 Berlina - Polimek / 504 / 505 (todos) | <-> | **T** | **533** | **311** | **222** |
| **7018** | **316 205** | Peugeot | Pick Up 504 | 81-92 | **T** | **651** | **405** | **246** |
| **7020G** | **316 206** | Peugeot | 405 GR-SR-SRI (incluido Break) / MI 16V | <-> | **T** | **384** | **274** | **110** |
| **7022** | **316 207** | Peugeot | Pick Up 504 | 06/92-> | **T** | **625** | **385** | **240** |
| **7028G** | **316 208** | Peugeot | 205 | 93-> | **T** | **324** | **244** | **80** |

| Código viejo SACHS | Código nuevo SACHS | Marca | Aplicación | Año | Pos. | Abierto (mm) | Cerrado (mm) | Carrera (mm) |
|---|---|---|---|---|---|---|---|---|
| **7030G** | **316 209** | Peugeot | 306 / Citroën ZX / Xsara | <-> | **T** | **330** | **248** | **82** |
| **7032** | **316 210** | Peugeot | 106 / Citroën Saxo | <-> | **T** | **299** | **213** | **86** |
| **7036G** | **316 211** | Peugeot | 406 (todos) | 97-> | **T** | **582** | **390** | **192** |
| **7040** | **316 212** | Peugeot | Partner / Citroën Berlingo | 97-> | **T** | **387** | **264** | **123** |
| **7048** | **316 213** | Peugeot | 206 | 99-> | **T** | **355** | **262** | **93** |
| **7305** | **316 214** | Peugeot | 404 Berlina-Sist. Polimek-P.up / 504 GLD-GLS-SL | <-> | **D** | **648** | **438** | **210** |
| **7321** | **316 215** | Peugeot | 504 y 505 SR-GR-SRD / 505 Familiar G. Tour | 86-> | **D** | **678** | **473** | **205** |
| **7323** | **316 216** | Peugeot | Pick Up 504 | 2/86-9/88 | **D** | **660** | **473** | **187** |
| **7329** | **316 217** | Peugeot | Pick Up 504 | 10/88-> | **D** | **669** | **494** | **175** |
| **7331G** | **316 218** | Peugeot | 405 GR-SR-SRI (incluido Break) | <-> | **D** | **518** | **323** | **195** |
| **7335G** | **316 219** | Peugeot | 205 / Citroën C15 | 85-> | **D** | **494** | **304** | **190** |
| **7339G** | **316 220** | Peugeot | 306 / Citroën ZX / Xsara / Partner y Berlingo susp. baja | <-> | **D** | **485** | **299** | **186** |
| **7343G** | **316 221** | Peugeot | 106 / Citroën Saxo | <-> | **D** | **517** | **333** | **184** |
| **7371G** | **316 222** | Peugeot | 206 | 99-> | **DD** | **496** | **317** | **179** |
| **7373G** | **316 223** | Peugeot | 206 | 99-> | **DI** | **496** | **317** | **179** |
| **7375G** | **316 224** | Peugeot | Partner / Berlingo susp. original | 07/96-> | **DI** | **490** | **306** | **184** |
| **7377G** | **316 225** | Peugeot | Partner / Berlingo susp. original | 07/96-> | **DD** | **490** | **306** | **184** |
| **8001** | **316 226** | Mitsubishi | L 200 4x2/ Hilux 2000 (--86) | ->89 | **D** | **368** | **236** | **132** |
| **8002** | **316 227** | Mitsubishi | L 200 y L300 4x2/ Hilux 2000 | ->89 | **T** | **489** | **308** | **181** |
| **8043/3G** | **316 228** | Nissan | Pick Up 720 4x2 / D21-D22 4x2 y 4x4 / 2WD / Luv 4x2 | <-> | **D** | **331** | **215** | **116** |
| **8044/3G** | **316 229** | GMC | Pick Up Luv 4X2 y 4x4 / Isuzu 4x2 y 4x4 / Amigo | <-> | **T** | **583** | **359** | **224** |
| **8044G** | **316 230** | GMC | Pick Up Luv 4X2 y 4x4 / Isuzu 4x2 y 4x4 / Amigo | <-> | **T** | **586** | **359** | **227** |
| **8045/3G** | **316 231** | GMC | Luv 4X4 / Isuzu 4x4 / Mazda 4x2 - 4x4 / D22 4x4 | 90-> | **D** | **375** | **240** | **135** |
| **8050** | **316 232** | Land Rover | Discovery / Defender | <-> | **T** | **566** | **345** | **221** |
| **8051** | **316 233** | Land Rover | Discovery / Defender | <-> | **D** | **552** | **325** | **227** |
| **8053** | **316 234** | Hyundai | H100 / Mitsubishi L300 4x2 | 94-> | **D** | **359** | **233** | **126** |
| **8055/3G** | **316 235** | Mitsubishi | Montero / L200 4x4 (97--) | 93-> | **D** | **347** | **226** | **121** |
| **8061/3G** | **316 236** | Toyota | Hilux 4x4 | 97-> | **D** | **372** | **241** | **131** |
| **8061G** | **316 237** | Toyota | Hilux 4x4 | 97-> | **D** | **370** | **237** | **133** |
| **8062G** | **316 238** | Toyota | Hilux 4x4 | 97-> | **T** | **548** | **338** | **210** |
| **8064G** | **316 239** | Nissan | Pick Up 2WD (USA)/ D21 y D22 4x2 | <-> | **T** | **517** | **320** | **197** |
| **8067/3G** | **316 240** | Toyota | Hilux 4x2 / Kia Besta | 97-> | **D** | **365** | **236** | **129** |
| **8067G** | **316 241** | Toyota | Hilux 4x2 / Kia Besta | 97-> | **D** | **372** | **234** | **138** |
| **8077G** | **316 242** | Toyota | Corolla | 92-01 | **DI** | **487** | **341** | **146** |
| **8079G** | **316 244** | Toyota | Corolla | 92-01 | **DD** | **487** | **341** | **146** |
| **8090/3G** | **316 245** | Toyota | Hilux 4x2 / Mazda 4x2 / Nissan 4x4 / Kia Besta | 97-> | **T** | **553** | **341** | **212** |
| **8090G** | **316 246** | Toyota | Hilux 4x2 / Mazda 4x2 / Nissan D21 4x4 / Kia Besta | 97-> | **T** | **553** | **341** | **212** |
| **8102G** | **316 247** | Toyota | Corolla | 03-12/07 | **T** | **477** | **307** | **170** |
| **8103G** | **316 248** | Toyota | Corolla | 03-12/07 | **DI** | **519** | **339** | **180** |
| **8105G** | **316 249** | Toyota | Corolla | 03-12/07 | **DD** | **519** | **339** | **180** |
| **8108G** | **316 250** | Toyota | Hilux 4x2 | 7/01-05 | **T** | **585** | **355** | **230** |
| **8114G** | **316 251** | Toyota | Hilux SW4 | 05-> | **T** | **555** | **335** | **220** |
| **8119G** | **316 252** | Toyota | Hilux 4x2 / 4x4 / SW4 | 05-> | **D** | **552** | **432** | **120** |
| **8133/3** | **316 253** | Mitsubishi | L 200 4x2 / 4x4 | 89-97 | **D** | **353** | **240** | **113** |
| **8134/3** | **316 254** | Mitsubishi | L 200 4x2 | 89-97 | **T** | **541** | **335** | **206** |
| **8155G** | **316 255** | Toyota | Hilux SW4 | 97-> | **D** | **455** | **341** | **114** |
| **8156** | **316 256** | Toyota | Hilux SW4 | 97-> | **T** | **517** | **321** | **196** |
| **9001** | **316 257** | Citroën | 3CV Y Furgoneta / 3CV - IES América / Ami 8 / Mehari | ->83 | **D** | **496** | **332** | **164** |
| **9003G** | **316 258** | Citroën | C3 | 05-> | **DD** | **460** | **297** | **163** |
| **9005G** | **316 259** | Citroën | C3 | 05-> | **DI** | **460** | **297** | **163** |
| **9013** | **316 260** | Rastrojero | Rastrojero | 68-79 | **D** | **347** | **222** | **125** |

| Código viejo SACHS | Código nuevo SACHS | Marca | Aplicación | Año | Pos. | Abierto (mm) | Cerrado (mm) | Carrera (mm) |
|---|---|---|---|---|---|---|---|---|
| **9020G** | **316 261** | Citroën | C3 | 05-> | **T** | **475** | **310** | **165** |
| **9313G** | **316 262** | Citroën | Xsara Picasso | 00-> | **D** | **490** | **317** | **173** |
| **12006G** | **316 266** | Jeep | Grand Cherokee 4x2 / 4x4 / Wrangler | ->01 | **T** | **546** | **341** | **205** |
| **8043G** | **316 268** | Nissan | Pick Up 720 4x2 / D21-D22 4x2 y 4x4 / 2WD / Luv 4x2 | <-> | **D** | **331** | **215** | **116** |
| **5074G** | **316 269** | GMC | Corsa Sedan / Wagon / Tigra | <-> | **T** | **442** | **272** | **170** |
| **1313G** | **316 270** | VW | Gol / Saveiro | <-> | **D** | **555** | **369** | **186** |
| **1030G** | **316 271** | VW | Gol | 95-> | **T** | **587** | **374** | **213** |
| **1347G** | **316 272** | VW | Polo / Caddy / Golf III GLX-GTI 2.0 / Seat Inca | 96-> | **D** | **530** | **377** | **153** |
| **1327G** | **316 273** | VW | Golf III TDI-GL Nafta / Seat Cordoba / Ibiza / Toledo | 94-99 | **D** | **521** | **359** | **162** |
| **8328G** | **316 274** | Toyota | RAV 4 | 94-> | **T** | **615** | **363** | **252** |
| **5021G** | **316 275** | GMC | Corsa II - Meriva | 02-> | **DD** | **497** | **332** | **165** |
| **5023G** | **316 276** | GMC | Corsa II - Meriva | 02-> | **DI** | **497** | **332** | **165** |
| **3009G** | **316 277** | Ford | Fiesta línea nueva | 02-> | **D** | **498** | **341** | **157** |
| **3008G** | **316 278** | Ford | Fiesta línea nueva | 02-> | **T** | **687** | **519** | **168** |
| **3012G** | **316 279** | Ford | EcoSport | 03-> | **T** | **728** | **463** | **266** |
| **1086G** | **316 280** | VW | Fox | 04-> | **T** | **650** | **406** | **244** |
| **4020** | **316 281** | Renault | R12 L-TS-TL-Break | ->89 | **T** | **607** | **360** | **247** |
| **8084G** | **316 282** | Rover | 414-416-420 / 214-216-220 (90-95) | 90-> | **T** | **496** | **349** | **147** |
| **4082G** | **316 283** | Renault | Laguna | 95-> | **T** | **464** | **383** | **81** |
| **315 361** | **316 290** | Renault | Duster 4x4 | 11-> | **T** | **678** | **447** | **231** |
| **315 360** | **316 292** | Renault | Duster 4x2 / 4x4 | 11-> | **D** | **585** | **400** | **185** |
| **-** | **316 331** | Peugeot | 508 | 12-> | **DI** | **507** | **381** | **126** |
| **-** | **316 332** | Peugeot | 508 | 12-> | **DD** | **507** | **381** | **126** |
| **5307** | **316 358** | GMC | Corsa Sedan / Combo Van / Wagon / Pick Up / Tigra | <-> | **D** | **473** | **312** | **161** |
| **-** | **316 386** | VW | Vento 2.0 TDI | 05/11-> | **T** | **597** | **381** | **216** |
| **-** | **316 387** | Fiat | Grand Siena | 10/12-> | **T** | **606** | **381** | **225** |
| **-** | **316 551** | Toyota | Etios | 13-> | **D** | **555** | **366** | **189** |
| **-** | **316 552** | Toyota | Etios | 13-> | **T** | **599** | **371** | **228** |
| **315 531** | **316 553** | Renault | Fluence | 10-> | **D** | **513** | **351** | **162** |
| **315 532** | **316 554** | Renault | Fluence | 10-> | **T** | **487** | **326** | **161** |
| **-** | **316 555** | Renault | Kangoo PH3 | 11/13-> | **D** | **535** | **374** | **161** |
| **-** | **316 708** | VW | Up! | 14-> | **D** | **531** | **399** | **132** |
| **-** | **316 710** | Hyundai | Santa Fe II | 06-12 | **DI** | **542** | **393** | **149** |
| **-** | **316 711** | Hyundai | Santa Fe II | 06-12 | **DD** | **542** | **393** | **149** |
| **-** | **316 760** | Ford | Focus III | 09/13-> | **T** | **718** | **475** | **243** |
| **-** | **316 761** | GM | Captiva | 07->14 | **DI** | **483** | **336** | **147** |
| **-** | **316 762** | GM | Captiva | 07->14 | **DD** | **483** | **336** | **147** |
| **-** | **316 851** | Kia | K2500 | 08-> | **D** | **428** | **275** | **153** |
| **-** | **316 852** | Kia | K2500 | 08-> | **T** | **513** | **322** | **191** |
| **4098G** | **316 863** | Renault | Clio (Serie II) | 12/99-> | **T** | **570** | **356** | **214** |
| **-** | **316 878** | Honda | CR-V | 11/06-> | **DI** | **519** | **347** | **172** |
| **-** | **316 879** | Honda | CR-V | 11/06-> | **DD** | **519** | **347** | **172** |
| **-** | **316 886** | Renault | Logan II / Sandero II | 11/13-> | **T** | **609** | **362** | **247** |
| **280 773** | **316 901** | Mitsubishi | Space Wagon | 99-> | **DI** | **544** | **365** | **179** |
| **280 774** | **316 902** | Mitsubishi | Space Wagon | 99-> | **DD** | **544** | **365** | **179** |
| **313 768** | **316 912** | Honda | CR-V II | 02-06 | **DI** | **466** | **321** | **145** |
| **313 767** | **316 913** | Honda | CR-V II | 02-06 | **DD** | **466** | **321** | **145** |
| **-** | **316 914** | Citroën | C3 Picasso / C3 Aircross | 10-> | **DI** | **462** | **295** | **167** |
| **-** | **316 915** | Citroën | C3 Picasso / C3 Aircross | 10-> | **DD** | **462** | **295** | **167** |
| **-** | **316 916** | Citroën | New C3 / 208 1.5 | 10-> | **DI** | **480** | **305** | **175** |

| Código viejo SACHS | Código nuevo SACHS | Marca | Aplicación | Año | Pos. | Abierto (mm) | Cerrado (mm) | Carrera (mm) |
|---|---|---|---|---|---|---|---|---|
| - | 316 917 | Citroën | New C3 / 208 1.5 | 10-> | DD | 480 | 305 | 175 |
| - | 316 918 | Peugeot | 208 1.6 | 13-> | DI | 459 | 292 | 167 |
| - | 316 919 | Peugeot | 208 1.6 | 13-> | DD | 459 | 292 | 167 |
| - | 316 926 | Renault | Logan II / Sandero II | 11/13-> | D | 498 | 353 | 145 |
| 313 663 | 316 927 | Suzuki | Swift III 1.5 | 07-> | T | 563 | 416 | 147 |
| - | 316 938 | VW | Up! | 14-> | T | 630 | 395 | 235 |
| - | 316 939 | Dodge | Journey | 11-> | T | 486 | 314 | 172 |
| 170 450 | 316 947 | Mercedes Benz | C200-C220-C220D-C250D-C280 Deportivo | 93-05/00 | D | 526 | 466 | 60 |
| 315 247 | 316 989 | Ford | Kuga | 10-13 | T | 626 | 423 | 203 |
| | 317 251 | Renault | Sandero Stepway II | 15-> | MP | 528 | 380 | 148 |
| 315 987 | 317 258 | Mercedes Benz | Clase E | 96-> | D | 529 | 415 | 114 |
| 315 987 | 317 258 | Mercedes Benz | Clase E | 96-> | D | 542 | 417 | 125 |
| 313 201 | 317 266 | Mercedes Benz | Clase C180-200-220-280-320-350 (Chasis 204) | 01/07-> | T | 586 | 424 | 163 |
| 553 870 | 317 268 | Mercedes Benz | C180-200-220-240-270-320 Sedan y Coupe | 05/00-> | T | 570 | 459 | 111 |
| - | 317 311 | Honda | CR-V | 02->12 | T | 394 | 284 | 110 |
| - | 317 316 | Renault | Clio II 1.2 | 11->08/12 | D | 520 | 332 | 188 |
| 315 245 | 317 326 | Ford | Kuga | 10-13 | DI | 517 | 340 | 177 |
| 315 246 | 317 327 | Ford | Kuga | 10-13 | DD | 517 | 340 | 177 |
| 313 216 | 317 350 | Volvo | XC90 (excepto Nivomat) | 08-> | T | 430 | 286 | 144 |
| 553 665 | 317 355 | Mercedes Benz | Clase A | <-> | T | 343 | 303 | 40 |
| 314 034 | 317 385 | Mercedes Benz | GLK | 10-> | T | 622 | 475 | 147 |
| - | 317 498 | Renault | Sandero Stepway II | 15-> | T | 638 | 398 | 240 |
| 7311 | 317 668 | Peugeot | 504 / 505 (todos) | ->86 | D | 690 | 466 | 224 |
| 8110G | 317 669 | Suzuki | Vitara / Grand Vitara | 89-> | T | 464 | 293 | 171 |
| - | 317 822 | Ford | Focus III | 14-> | MP | 477 | 310 | 167 |
| - | 317 823 | Ford | Focus III | 14-> | MP | 477 | 310 | 167 |
| - | 317 824 | Jeep | Renegade 4x2 | 02/16-> | MP | 572 | 399 | 173 |
| - | 317 825 | Jeep | Renegade 4x2 | 02/16-> | MP | 572 | 399 | 173 |
| - | 317 946 | Jeep | Renegade 4x2 | 02/16-> | MP | 598 | 407 | 191 |
| - | 317 947 | Jeep | Renegade 4x2 | 02/16-> | MP | 598 | 407 | 191 |
| - | 317 948 | Fiat | Mobi | 09-> | MP | 490 | 379 | 111 |
| - | 317 949 | Fiat | Mobi | 09-> | MP | 490 | 379 | 111 |
| - | 317 950 | Fiat | Mobi | 09-> | T | 624 | 458 | 166 |
| - | 317 951 | Fiat | Fiorino Evo | 14-> | T | 437 | 285 | 152 |
| - | 317 952 | Chevrolet | Cruze II | 16-> | T | | | |
| 400 019 | 400 019 | VW | Sharan | 11-> | T | 598 | 378 | 220 |
| E11303 | 553 058 | Volvo | 850 / 850 Sports Wagon / S-V-C70 (97--) | 91-96 | D | 541 | 362 | 179 |
| E5100G | 553 259 | GMC | Astra Caravan (Familiar) | 92-98 | T | 473 | 293 | 180 |
| E28001G | 553 680 | Saab | 9-5 | 98-08/01 | D | 529 | 351 | 178 |
| E6009G | 553 871 | Mercedes Benz | C180-200-220-240-270-320 Sedan y Coupe | 05/00-> | D | 611 | 469 | 143 |
| E11309G | 554 041 | Volvo | Volvo XC70 | 00-> | D | 560 | 387 | 174 |
| E11009G | 554 046 | Volvo | Volvo S60 / S80 | 98-> | D | 529 | 362 | 167 |
| E1078G | 556 281 | Audi | Audi A6 Quattro | 97-> | T | 475 | 348 | 127 |
| E2042G | 556 307 | Alfa Romeo | 156 2,0 - JTD - V6 - 2,5V6 24V | 09/97-> | T | 571 | 484 | 87 |
| E14325G | 556 832 | BMW | (E39) 523i-525td-525Tds-528i-530d | 95-> | D | 422 | 306 | 116 |
| E14013G | 556 836 | BMW | (E39) 535i-540i | 96-00 | D | 410 | 293 | 117 |
| E14001G | 556 867 | BMW | (E46) 316-318-320-323-328-330d Sedan / Coupe | 99-> | DI | 443 | 321 | 122 |
| E14003G | 556 868 | BMW | (E46) 316-318-320-323-328-330d Sedan / Coupe | 99-> | DD | 443 | 321 | 122 |
| E14018G | 556 882 | BMW | (E36) 316-18-20-23-25-28 / Coupe 320-23-25-28 | 92-> | T | 617 | 383 | 234 |
| E1017G | 557 837 | VW | Passat (3B2/ B5) plato liso | 97-11/00 | D | 595 | 461 | 134 |
| E1041G | 558 301 | Audi | A4 (8E2/B6) | 01-12/04 | D | 622 | 485 | 137 |

# *Notas*

# Instrucciones de Montaje

## Por tipo de fijación

### Fijación 1

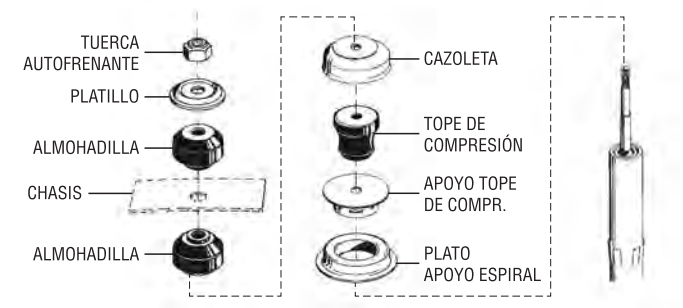


1- Desmonte el Plato de Apoyo Espiral, el Apoyo Tope de Compresión, Tope de Compresión y Cazoleta del amortiguador a reemplazar. Asegúrese de que estos componentes no sufran golpes ni deformaciones, de modo que puedan ser colocados en el amortiguador de recambio.

2- Coloque el Plato de Apoyo Espiral en el nuevo amortiguador, asegurando un correcto asiento en las muescas que ofrece el carter.

3- Monte el Asiento Tope de Compresión, Tope de Compresión y Cazoleta, verificando su correcto funcionamiento.

### Fijación 2

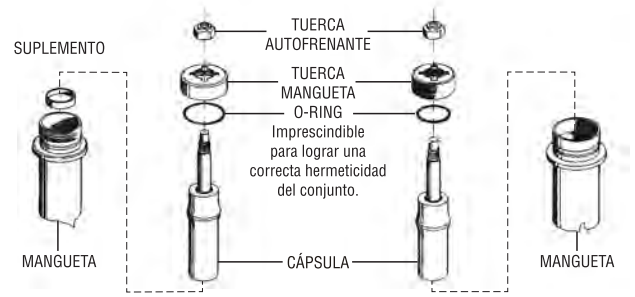


Este tipo de sujeción también comprende a las suspensiones con sistema POLIMEK. Colocar en el interior de la mangueta aceite SAE20, 30 ó 40 para refrigeración.

Cantidad: Para cápsula de diám.: 41,28 mm: 50 cm³, 80 mm: 80 cm³.

### Fijación 3

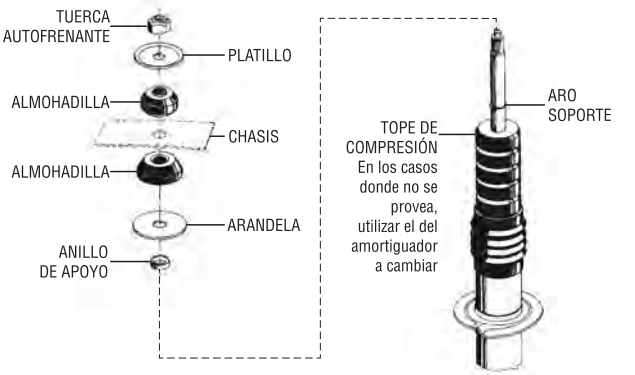


### Fijación 4

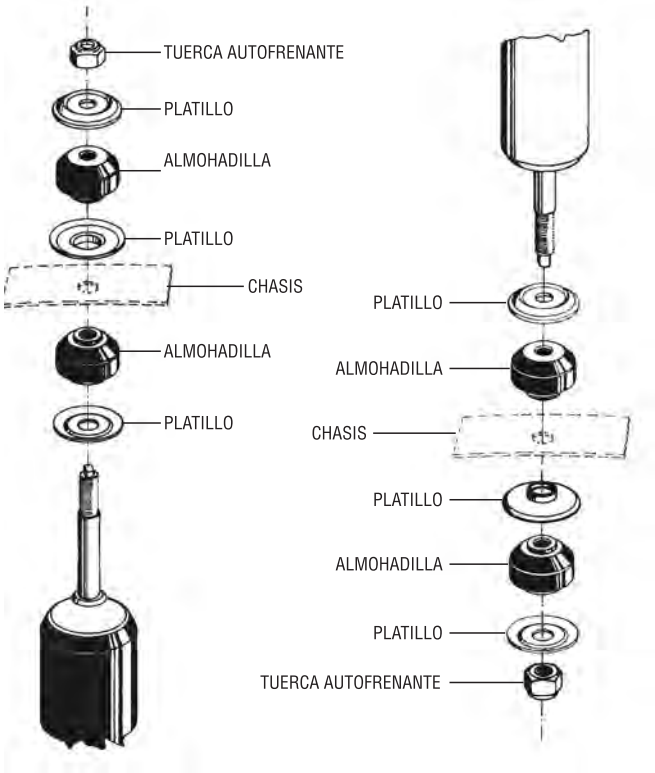


### Fijación 5

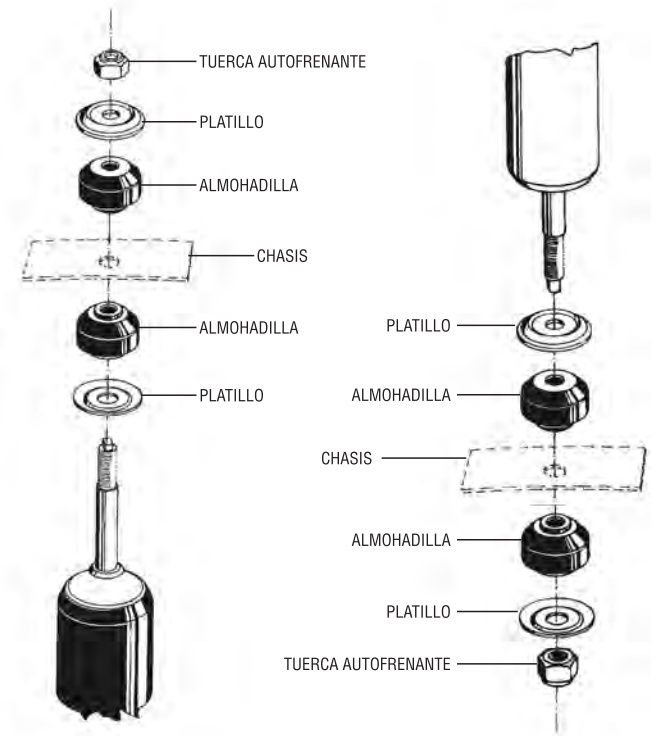

## Fijación 6

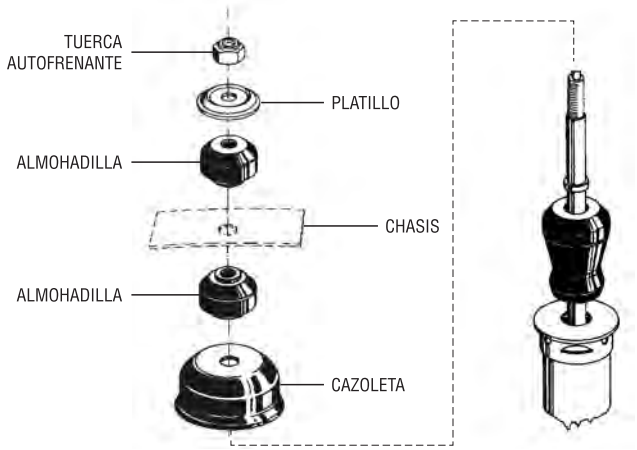


## Fijación 7

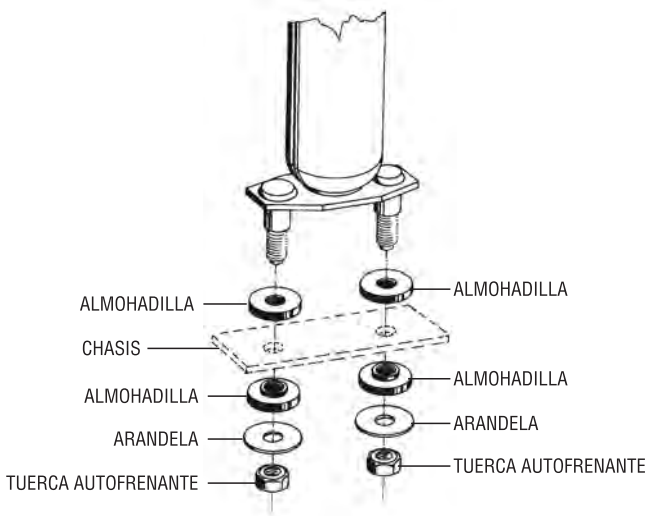


## Fijación 8

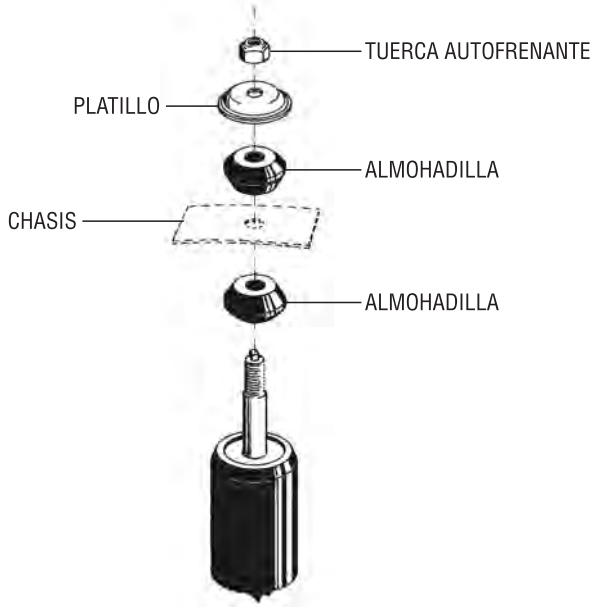


## Consejo para una buena instalación

1 Respete el código de aplicación que tiene cada amotiguador según lo indicado en el catálogo SACHS.
Recuerde que amortiguadores de estructuras parecidas NO FUNCIONAN IGUAL.

2 Nunca sujete el amortiguador por su vástago al montarlo o desmontarlo de su vehículo.
Tómelo desde sus entrecaras o hexágonos embutidos con herramientas especiales. Recuerde que el vástago es la pieza más importante del amortiguador.

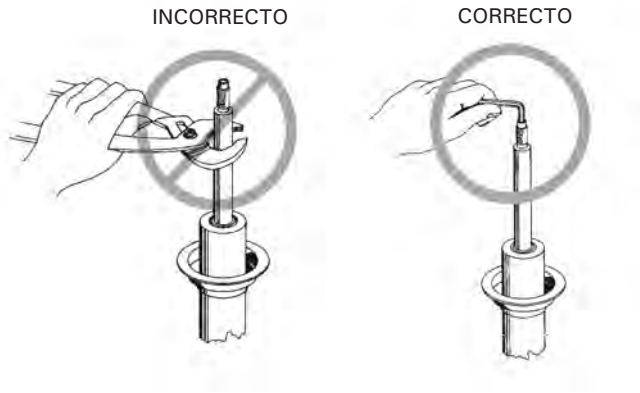


3 Respete los torques de las tuercas indicados por los fabricantes de vehículos para la fijación del amortiguador al chasis. De esta forma se asegura la vida útil de las almohadillas y la resistencia mecánica de las espigas de montaje.

4 Una vez instalado un nuevo amortiguador verifique el ALíneaDO y BALANCEO de las ruedas según especificaciones del fabricante del vehículo, especialmente para suspensiones McPherson.

Accesorios mal montados acortan la vida útil de todas las piezas de la suspensión, además de imposibilitar su correcto funcionamiento.

En caso de que los accesorios originales se encuentren deteriorados, vencidos o rotos DEBEN SER REEMPLAZADOS.

## Aplicaciones especiales

**Aplicaciones en posición horizontal y estabilizadores de Dirección**

Los amortiguadores de posición horizontal admiten un solo modo de colocación. En aquellos vehículos donde el amortiguador montado tenga una inclinación inferior a 45° respecto del piso, respete la posición de montaje según se indica en el carter de dicho amortiguador.
Ej.: estabilizadores, 9001-4018, etc.

Válido a partir de 11.2017

SACHS

ZF Aftermarket
aftermarket.zf.com/ar/sachs
At. al cliente 0800 888 8850