Test requirement(s)

Only a manufacturer approved wheel/tyre combination may be installed on the vehicle.
Tread depth on both tires of an axle may deviate max. 1-2 mm.
Check tyre inflation pressure and correct if required.
Check the axle and steering components for play and wear.
Check the shock absorber for condition and integrity.

Vehicles with pneumatic suspension

The air supply system needs to be removed to prevent air suspension from being controlled.

The design position refers to measure -X-.
Measure the distance between rim flange and wing edge. **(X)**
(see figure 1)

Figure 1

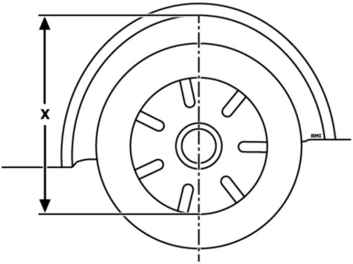

The test value is required to check the chassis setting.
The set value is required to set the chassis.

Front axle design position	Load vehicle in the suspension strut areas using additional weight until the tolerance range has been reached.	with series chassis, with 17 inch rim, Test value 606 - 626 mm ; with series chassis, Setting, with 17 inch rim 614 - 618 mm ; with series chassis, with 18 inch rim, Test value 619 - 639 mm ; with series chassis, Setting, with 18 inch rim 627 - 631 mm ; with series chassis, with 19 inch rim, Test value 632 - 652 mm ; with series chassis, Setting, with 19 inch rim 640 - 644 mm ; with series chassis, with 20 inch rim, Test value 644 - 664 mm ; with series chassis, Setting, with 20 inch rim 652 - 656 mm ; with sports suspension, with 17 inch rim, Test value 596 - 616 mm ; with sports suspension, Setting, with 17 inch rim 604 - 608 mm ; with sports suspension, with 18 inch rim, Test value 609 - 629 mm ; with sports suspension, Setting, with 18 inch rim 617 - 621 mm ; with sports suspension, with 19 inch rim, Test value 622 - 642 mm ; with sports suspension, Setting, with 19 inch rim 630 - 634 mm ; with sports suspension, with 20 inch rim, Test value 634 - 654 mm ; with sports suspension, Setting, with 20 inch rim 642 - 646 mm

Rear axle design position	**Load vehicle in the suspension strut areas using additional weight until the tolerance range has been reached.**	**with series chassis, with 17 inch rim, Test value 607 - 627 mm ; with series chassis, Setting, with 17 inch rim 615 - 619 mm ; with series chassis, with 18 inch rim, Test value 620 - 640 mm ; with series chassis, Setting, with 18 inch rim 628 - 632 mm ; with series chassis, with 19 inch rim, Test value 632 - 652 mm ; with series chassis, Setting, with 19 inch rim 640 - 644 mm ; with series chassis, with 20 inch rim, Test value 645 - 665 mm ; with series chassis, Setting, with 20 inch rim 653 - 657 mm ; with sports suspension, with 17 inch rim, Test value 598 - 618 mm ; with sports suspension, Setting, with 17 inch rim 606 - 610 mm ; with sports suspension, with 18 inch rim, Test value 610 - 630 mm ; with sports suspension, Setting, with 18 inch rim 618 - 622 mm ; with sports suspension, with 19 inch rim, Test value 623 - 643 mm ; with sports suspension, Setting, with 19 inch rim 631 - 635 mm ; with sports suspension, with 20 inch rim, Test value 636 - 656 mm ; with sports suspension, Setting, with 20 inch rim 644 - 648 mm**

Required Labour times/torques

Scheduled times

Measure the chassis	**1,50 h** **with input of level (at vehicle measuring) 0,90 h**
Adjust the chassis	**with input of level (at vehicle measuring) 1,80 h**

Required torques

Track control arm, rear axle, upper (3)	**(see figure 3)**	**Use new screw(s) and nut(s).**	**at the axle support 175 Nm ; on stub axle, 01 stage 90 Nm ; on stub axle, 02 stage 180°**
Track control arm, rear axle, lower (3)	**(see figure 4)**	**Use new screw(s) and nut(s).**	**at the axle support, front, 01 stage 165 Nm ; at the axle support, front, 02 stage 90° ; at the axle support, rear 175 Nm ; on stub axle, M16 265 Nm**

Required settings

Axle, measured values

front axle	
Toe-in front (total toe)	**Test value 0°10'+0°12'-0°12' ; Setting 0°10'+0°04'-0°04'**
Camber front	**with series chassis, Test value -0°12'+0°30'-0°30' ; with series chassis, Setting -0°12'+0°25'-0°25' ; with sports suspension, Test value -0°29'+0°30'-0°30' ; with sports suspension, Setting -0°29'+0°25'-0°25'**
Wheel steering angle inner wheel (relative steering angle)	**20°00'+0°00'-0°00'**
Wheel steering angle outer wheel (relative steering angle)	**18°09'+0°30'-0°30'**
rear axle	
Toe-in rear	**Test value 0°18'+0°12'-0°12' ; Setting 0°18'+0°04'-0°04'**
Camber rear	**Test value -1°50'+0°25'-0°25' ; Setting -1°50'+0°05'-0°05'**

Adjust rear axle

Vehicles with adaptive cruise control system

Adaptive cruise control system needs to be re-adjusted after setting the rear axle.

Vehicle with rear-axle steering

Rear-axle steering needs to be set using a suitable diagnostic unit.
Note position of EOBD connection.

Toe and camber will automatically adjust when the adjusting screw is being turned on the upper or lower wishbone.
Toe and camber cannot be adjusted individually.
Correct rear axle measurement is only possible by using the measuring diagram.

Rear axle components overview

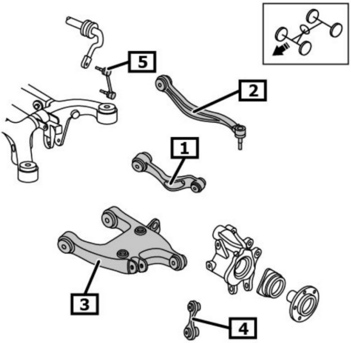

1 Upper front rear axle transverse control arm

2 Upper rear rear axle transverse control arm

3 Track control arm, rear axle, lower

4 Integral control arm

5 Stabiliser support

Setting in design position (setting for kerb weight position)

Read toe and camber actual value from the wheel alignment station and plot it in the diagram. **(1)**
Example: Toe -15', camber -100'
Draw parallel line to the wishbone line on top (C) through the entered actual value (1).
Intersection (2) on the lower wishbone line (D) results in camber/toe intermediate setting.
Example: Camber 117°
(see figure 2)

Figure 2

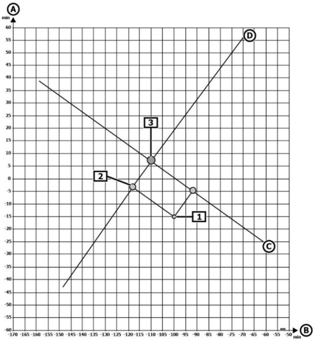

A Toe

B Camber

C = Camber

D = Toe

1 Actual value(s)

2 Intermediate adjustment value

3 Nominal value in design position

Adjustment on the wishbone rear axle top front

Replace nut. **(1)**

Pre-tighten nut with 5 Nm. **(1)**

(see figure 3)

Turn eccentric screw until intermediate adjustment value is reached. **(2)**

(see figure 3)

Adjust intermediate adjustment value with the diagram. **(2)**

(see figure 2)

Tighten nut(s). **(1)**

(see figure 3)

Figure 3

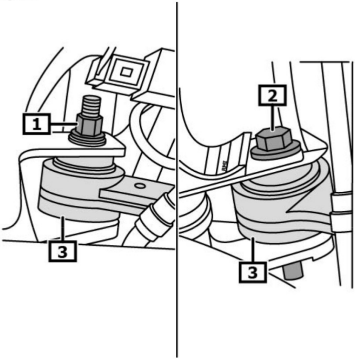

1 Nut

2 Eccentric screw

3 Track control arm, rear axle, upper

Adjustment on the wishbone rear axle at the bottom

Replace nut. **(1)**

Pre-tighten nut with 5 Nm. **(1)**

(see figure 4)

Adjust eccentric screw until nominal value has been reached. **(2)**

(see figure 4)

Adjust toe and camber with the diagram. **(3)**

The nominal value for toe and camber moves down on the drawn-in wishbone line when the eccentric screw is being adjusted. **(D)**

(see figure 2)

Tighten nut(s). **(1)**

(see figure 4)

Figure 4

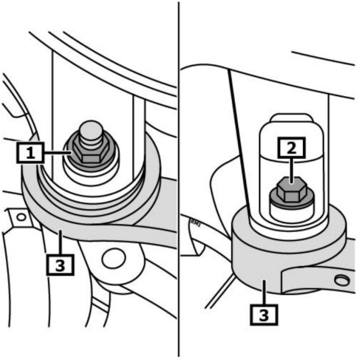

1 Nut

2 Eccentric screw

3 Track control arm, rear axle, lower

Setting with height-level depending measurement (unloaded)

Read toe and camber actual values from the wheel alignment station and set it in the diagram. **(3)**

Example: Toe +13', camber -72'

Draw line F parallel to line D through nominal value. **(3)**

Draw line E parallel to line C through nominal value. **(3)**

(see figure 5)

In this example, the missing actual toe and camber value needs to be drawn in accordingly. (1)

(see figure 2)

Turn eccentric screw until intermediate adjustment value is reached. **(2)**

(see figure 3)

Turn eccentric screw until intermediate adjustment value is reached. **(2)**

(see figure 4)

The toe and camber value moves down on the drawn-in wishbone line when eccentric screw is being adjusted. **(F)**

(see figure 5)

Figure 5

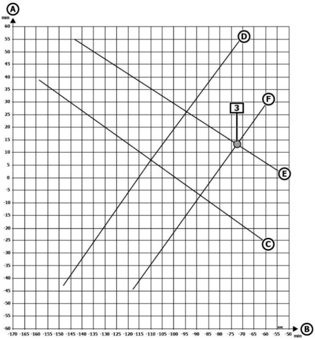

A Toe

B Camber

C Line - Standard chassis

D Line - Standard chassis

E Camber

F Toe

3 Nominal value from the wheel-alignment analysis computer

Diagram for printout and value input

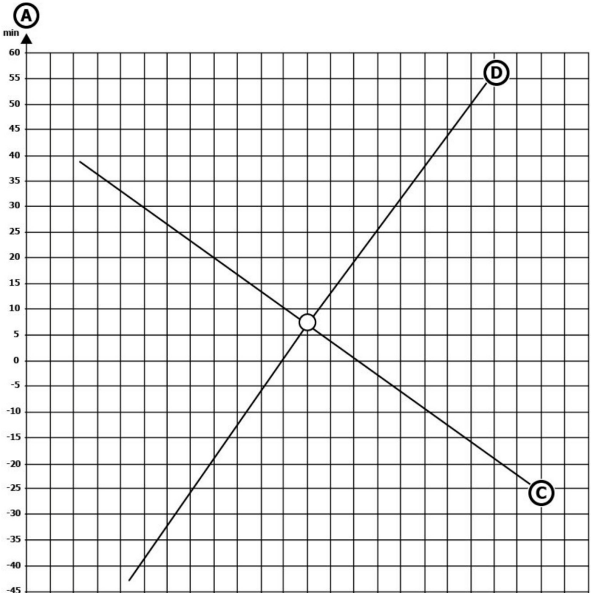

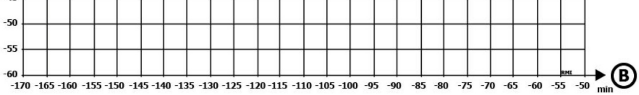

Download / Print Document

Disclaimer

Back to Top