ZF Aftermarket Service Information

Mechatronic Repair Kit
6HP Automatic Transmission

Product	Automatic Transmission 6HP
Document number	PSI2406 | 1068.754.707

AFTERMARKET

ZF Aftermarket
Service Information



1	Installation Instructions	4
1.1	Overview of 6HP Mechatronic repair kits	4
2	Safety	7
2.1	Signal words and symbols	7
2.2	General safety instructions	8
2.3	Product-specific safety instructions	11
2.3.1	HV system	11
2.3.2	ESD protection	12
2.3.3	Bolted joint	13
3	Information regarding work on the ZF product	14
3.1	General information	14
3.2	Cleaning the ZF product	14
3.3	Dismantling the ZF product	14
3.4	Assembling the ZF product	14
3.5	Cleaning parts	15
3.6	Reusing parts	15
3.7	Replacing parts	16
3.8	Reworking parts	16
3.9	Cleanliness specifications for ZF-products with hydraulic components	16
4	Removing and Dismantling Mechatronic	18
4.1	Removing Mechatronic	18
4.2	Dismantling Mechatronic	18
5	Illustration of Spare Parts Kits	20
5.1	1068.298.600 - valve housing	21
5.2	1068.298.600 - valve plate	22
5.3	1068.298.601 - valve housing	25
5.4	1068.298.601 - valve plate	26
5.5	1068.298.602 - valve housing	29
5.6	1068.298.602 - valve plate	30
5.7	1068.298.603 - valve housing	33
5.8	1068.298.603 - valve plate	34
5.9	1068.298.604 - valve housing	37
5.10	1068.298.604 - valve plate	38
5.11	1068.298.605 - valve housing	41
5.12	1068.298.605 - valve plate	42
5.13	1068.298.606 - valve housing	45
5.14	1068.298.606 - valve plate	46
5.15	1068.298.607 - valve housing	49
5.16	1068.298.607 - valve plate	50

© ZF Friedrichshafen AG



5.17 1068.298.608 - valve housing 53
5.18 1068.298.608 - valve plate 54
5.19 1068.298.609 - valve housing 57
5.20 1068.298.609 - valve plate 58
5.21 1068.298.610 - valve housing 61
5.22 1068.298.610 - valve plate 62
5.23 1068.298.611 - valve housing 65
5.24 1068.298.611 - valve plate 66

6 Tightening Specifications 69
6.1 1068.700.123 - Mechatronic (shift by cable) 6HP19 | 6HP26 | 6HP32 69
6.2 1068.700.123 - Mechatronic (shift by wire) 6HP19 | 6HP26 | 6HP32 71
6.3 1068.700.239 - Mechatronic (shift by cable) 6HP21 | 6HP28 73
6.4 1068.700.239 - Mechatronic (shift by wire) 6HP21 | 6HP28 75

© ZF Friedrichshafen AG

1 Installation Instructions

This document is exclusively valid for the repair of the Mechatronic of ZF 6HP automatic transmissions. The information and part numbers/assignments shown here represent the status of the information at the time of creating the document (see footer).

The illustrations in the instructions show an example of the position and number of elements to be dismantled. Deviations from the respective Mechatronic may occur depending on the specific variant and design. The instructions must be followed accordingly.

A repair of the Mechatronic without a test bench run with hardware calibration is not recommended.

Replacing the shift elements without technical training at ZF Aftermarket is at your own responsibility.

If the adaptation values are not reset, the shifting and response behavior of the transmission control may subjectively deteriorate over a longer period of time. This is no material defect.

When repairing the Mechatronic of the ZF 6HP automatic transmission, adhere to the technical data specified in this document, such as tightening torques and sequences. The repair kits supplied by ZF Aftermarket for repairing the Mechatronic contain separate packaging for each shift element. The individual parts must not be mixed up, even if they look similar.

1.1 Overview of 6HP Mechatronic repair kits

Kit	Mechatronic	Version	1st Generation	2nd Generation	Shift by cable	Shift by wire
1068.298.600	1068.128.358	E20/1	X		X	
	1068.128.359					
	1068.128.366					
	1068.128.373					
	1068.128.397					
	1071.128.316					
	1071.128.320					
	1071.128.321					
	1071.128.322					
	1068.128.353	E20/3				
	1068.128.401					
	1068.128.416					
	1071.128.318					
	1071.128.332					
	1071.128.339					

Tab. 1 1068.298.600

© ZF Friedrichshafen AG

Kit	Mechatronic	Version	1st Generation	2nd Generation	Shift by cable	Shift by wire
1068.298.601	1068.128.350	E20/1	X		X	
	1068.128.357					

Tab. 2 1068.298.601

Kit	Mechatronic	Version	1st Generation	2nd Generation	Shift by cable	Shift by wire
1068.298.602	1068.128.329	E20/1	X		X	
	1068.128.330					
	1068.128.331					
	1068.128.334					
	1068.128.356					
	1071.128.303					
	1071.128.304					

Tab. 3 1068.298.602

Kit	Mechatronic	Version	1st Generation	2nd Generation	Shift by cable	Shift by wire
1068.298.603	1068.128.364	E20/1	X		X	
	1068.128.381					

Tab. 4 1068.298.603

Kit	Mechatronic	Version	1st Generation	2nd Generation	Shift by cable	Shift by wire
1068.298.604	1068.128.365	E20/1	X		X	

Tab. 5 1068.298.604

Kit	Mechatronic	Version	1st Generation	2nd Generation	Shift by cable	Shift by wire
1068.298.605	1068.128.393	E20/5		X	X	
	1068.128.408					
	1068.128.411					
	1068.128.431					
	1071.128.336					
	1071.128.342					

Tab. 6 1068.298.605

Kit	Mechatronic	Version	1st Generation	2nd Generation	Shift by cable	Shift by wire
1068.298.606	1084.128.303	E20/7		X	X	
	1084.128.304					

Tab. 7 1068.298.606

Kit	Mechatronic	Version	1st Generation	2nd Generation	Shift by cable	Shift by wire
1068.298.607	1068.128.332	E20/2	X			X
	1068.128.341					
	1071.128.307					

Tab. 8 1068.298.607

ZF Friedrichshafen AG
ZF Aftermarket
Metzer Straße 160
66117 Saarbrücken

Technical support
Telefon/Phone: +49 681 920-0
www.zf.com/contact

© ZF Friedrichshafen AG

Kit	Mechatronic	Version	1st Generation	2nd Generation	Shift by cable	Shift by wire
1068.298.608	1068.128.382	E20/2	X			E

Tab. 9 1068.298.608

Kit	Mechatronic	Version	1st Generation	2nd Generation	Shift by cable	Shift by wire
1068.298.609	1068.128.380	E20/2	X			E

Tab. 10 1068.298.609

Kit	Mechatronic	Version	1st Generation	2nd Generation	Shift by cable	Shift by wire
1068.298.610	1068.128.354	E20/4	X			X
	1068.128.403					
	1068.128.429					
	1071.128.319					

Tab. 11 1068.298.610

Kit	Mechatronic	Version	1st Generation	2nd Generation	Shift by cable	Shift by wire
1068.298.611	1068.128.406	E20/6		X		X
	1068.128.426					
	1071.128.335					
	1071.128.341					
	1071.128.351					

Tab. 12 1068.298.611

ZF Friedrichshafen AG
ZF Aftermarket
Metzer Straße 160
66117 Saarbrücken

Technical support
Telefon/Phone: +49 681 920-0
www.zf.com/contact

© ZF Friedrichshafen AG



2 Safety

2.1 Signal words and symbols

This document contains particularly highlighted safety instructions which are marked with one of the following signal words depending on the severity of the danger.

⚠ DANGER

DANGER
The signal word DANGER indicates a dangerous situation that, if not prevented, will lead to a severe injury or death.
⇨ Information as to how the danger can be prevented.

⚠ WARNING

WARNING
The signal word WARNING indicates a dangerous situation that, if not prevented, can lead to a severe injury or death.
⇨ Information as to how the danger can be prevented.

⚠ CAUTION

CAUTION
The signal word CAUTION indicates a dangerous situation that, if not prevented, can lead to a slight or moderate injury.
⇨ Information as to how the danger can be prevented.

NOTICE

The signal word NOTICE indicates a situation that, if not prevented, can lead to property damage.
⇨ Information as to how the property damage can be prevented.

The following symbols are additionally used:

⚠ This symbol refers to additional, safety-relevant information.

ⓘ This symbol indicates information concerning special workflows, methods, application of auxiliaries, etc.

ZF Friedrichshafen AG
ZF Aftermarket
Metzer Straße 160
66117 Saarbrücken

Technical support
Telefon/Phone: +49 681 920-0
www.zf.com/contact
© ZF Friedrichshafen AG

2.2 General safety instructions

Read all safety instructions and information. Non-compliance may lead to property damage, serious injuries or death.

Keep the documentation for future reference.

Intended use

The ZF product is exclusively intended for the contractually agreed purpose that is valid at the time of delivery. Any other or extended form of use does not comply with this definition of intended use. The intended use also includes compliance with this documentation and other applicable documents in order to avoid malfunctions and damage.

The ZF product is designed and produced in line with state-of-the-art technology. The ZF product in its delivery status is safe to operate. However, the ZF product may pose dangers if improperly used by unauthorized, untrained and uninstructed staff or if not used according to its intended use.

Figures might deviate from the ZF product and are not drawn to scale. No conclusions can be drawn with regard to size and weight.

Assembly, commissioning, operation, maintenance and repair

Perform assembly, commissioning, operation, maintenance and repair work exclusively according to this documentation and other applicable documents.

Observe the following points:

- Employ authorized, trained and instructed staff. Employ staff qualified in electrical engineering for work on electrical systems.
- Observe technical specifications.
- Unauthorized changes and modifications may lead to the expiry of the operator's license, warranty or guarantee.

ZF recommends observing the following points:

- Use genuine ZF spare parts.
- Use genuine ZF accessories.
- Use genuine ZF special tools.

In case of damage, contact ZF and have the following information on the product ready:

- Type
- Parts list [BoM] number
- Serial number
- Operating hours
- Description of damage

Observe safety instructions, applicable safety regulations and legal requirements to prevent malfunctions and damage.

© ZF Friedrichshafen AG



Country-specific safety regulations, accident prevention regulations and environmental protection provisions apply additionally.

Wear safety-relevant workwear for all work. Depending on the work, also wear personal protective equipment.

After completing the work, check proper function and operational safety.

Handling of ZF product

Unauthorized changes and modifications may impair operational safety. Changes, modifications and applications are only permissible upon written approval by ZF Friedrichshafen AG.

Observe the following when working on the ZF product:

- Secure workspace.
- Carry out work with the electrical system being switched off and after its electrical isolation has been tested.
- Secure electrical system against being switched on accidentally. Attach instruction plate where it is clearly visible.
- Perform work when engine is switched off.
- Protect engine against being started accidentally. Attach instruction plate where it is clearly visible.
- Do not stand beneath a suspended load.
- Do not work on a suspended load.
- Only use permitted means of transport and lifting equipment with sufficient load rating.
- Close open pipings and hoses and avoid damage.
- Observe tightening torques.
- Protect wiring against mechanical damage.
- Beware of the impact on active and passive medical implants.

Noise

Noise might cause irreversible damage to hearing.

The perception of acoustic signals, warning calls or sounds that indicate danger is impaired by noise.

Observe the following when working on the ZF product:

- Avoid noise.
- Wear ear protection.

Operating supplies and auxiliary materials

Operating supplies and auxiliary materials might cause permanent damage to health and environmental damage.

Observe the following when selecting operating supplies and auxiliary materials:

- Health risks
- Environmental compatibility

© ZF Friedrichshafen AG



- Material safety data sheets

Observe the following when handling operating supplies and auxiliary materials:

- Store operating supplies and auxiliary materials in suitable and correctly labeled containers.
- Seek medical help in case of injuries due to hot, cold or caustic operating supplies or auxiliary materials.

Observe the following to protect the environment:

- Collect leaking operating supplies and auxiliary materials in sufficiently large containers.
- Observe disposal regulations.
- Observe material safety data sheets.

© ZF Friedrichshafen AG

2.3 Product-specific safety instructions

2.3.1 HV system

High voltage (HV) may pose a risk for persons.

The following hazards may lead to severe injuries or death:

- Malfunction
- Electric current
- Hazardous substances
- Fire
- Hot surfaces and media

The following impacts are possible:

- Electric current flowing through the body
- Hazard by electric arc
- Poisoning
- Chemical burn
- Secondary accidents

Examples of warning signs for marking an HV component.



Fig. 1 Warning: dangerous electrical power

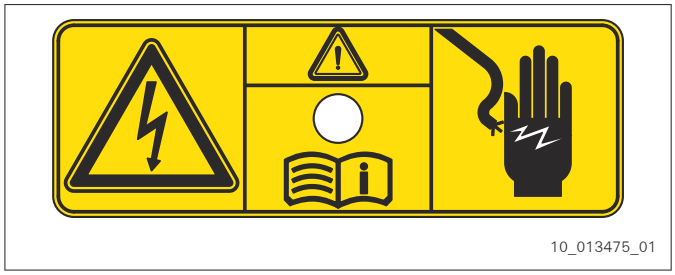

Fig. 2 Warning: dangerous electrical power

Examples of how to mark a secured working area.



Fig. 3 No access for unauthorized persons

© ZF Friedrichshafen AG

Responsibility of vehicle manufacturer and workshop operator:

- Comply with applicable national and international laws, regulations, provisions, standards and information for HV safety.
- Employ qualified electrical engineering personnel for doing work on HV components, e. g. person being qualified for high voltage analogous to DGUV (German Statutory Accident Insurance) information, qualification for work on vehicles with high voltage systems.

Measures to avoid and reduce any risk:

- Disconnect the electrical system from the charging device.
- Isolate the electrical system according to the vehicle manufacturer's specifications prior to starting any work.
- Secure electrical system against restart.
- Verify that no voltage is present.
- Observe reduction of residual power.
- Mark the electrical system as electrically isolated.
- Ensure that the parts are de-energized while working.

Further information:

- ECE R 100
- ISO 6469

2.3.2 ESD protection

Electrostatic discharge (ESD) might cause damage to electronic parts due to overvoltage.

Warning sign for marking electrostatic discharge sensitive parts.



Fig. 4 Electrostatic discharge sensitive part

Warning sign for marking products protecting from ESD, e. g. electrically conductive safety footwear, protective coverings, clothing, mats, trolleys.



Fig. 5 Product protecting from ESD

Protect parts from damage due to electrostatic discharge (ESD):

- Do not touch contacts.



- Wear conductive workwear.
- Ground workplace.
- Use ESD transport protection.
- Use ESD protective packaging.
- Use ESD transport protection and ESD protective packaging when transporting electronic parts.

Further information:

- DIN EN 61340-5-1/2/3
- VDE 0300
- IEC/TR 61340
- ANSI/ESD standards

2.3.3 Bolted joint

The torque wrenches must be calibrated according to DIN EN ISO 6789.

© ZF Friedrichshafen AG



3 Information regarding work on the ZF product

3.1 General information

- Read this documentation.
- Find out whether ZF Service Information on the ZF product is available. ZF Service Information may contain tests or supplements to the ZF product or to repair processes, which might be missing in this documentation. ZF-Service Information is available at your ZF Services Partner or in the ZF Aftermarket portal.
- In cases of doubt, consult ZF Aftermarket.
- Ensure that all work on the ZF product is performed expertly and under clean conditions.
- Use the specified special tools and equipment intended for the working procedures described.
- Perform all work according to the working procedure described.
- Cover open ZF products to prevent foreign matter from entering.
- Cover reusable parts that have been removed and protect them against dirt, corrosion and damage.
- After completion of work and inspections, authorized, trained and instructed staff must ensure that the ZF product is again functioning perfectly and is safe to operate.

3.2 Cleaning the ZF product

Clean the ZF product with an appropriate cleaning agent prior to any work.

NOTICE
Possible damage to ZF product due to penetrating water. ⇨ Be careful when using a pressure washer on the ZF product.

3.3 Dismantling the ZF product

- Reusable parts must be clearly assigned to the dismantled ZF product and the assemblies defined in this documentation. The assignment makes sure that reusable parts (e.g. gear parts, spacers or shims, electronic components) are not mixed up.
- Assemblies which must not be disassembled or are only available as spare parts assemblies are described accordingly. Please refer to the spare parts catalog for the ZF product.
- Inspect the parts during disassembly in order to find a potential cause of damage.

3.4 Assembling the ZF product

Assemble the ZF product at a clean workplace. The order of work steps, configuration data, and tightening torques must be observed. Use the special tools specified in the work steps.

© ZF Friedrichshafen AG

Bearing

The provisions on installing the bearings are described in the respective work step. After installation, apply oil to the bearing.

Sealing compound

Sealing compound is only to be used when described as such in the work step *(refer to Section Operating Supplies and Auxiliary Materials)*. Please observe the manufacturer guidelines and processing instructions. Apply the sealing compound thinly and evenly. Keep oil ducts and oil bores free of sealing compound. When assembling the parts, no sealing compound must enter the oil ducts or oil bores.

Retaining agents

Retaining agents are only to be used when described as such in the work step *(refer to Section Operating Supplies and Auxiliary Materials)*. Please observe the manufacturer guidelines and processing instructions.

Oil

Fill the ZF product with oil before initial operation. For the procedure and approved oil grades, refer to the document valid for the ZF product, the type plate, and/or the latest List of Lubricants TE-ML. These documents are available at your ZF Services Partner and under www.zf.com.

3.5 Cleaning parts

- Clean all reusable parts.
- Clean lined clutch disks with a lint-free cloth only.
- Remove sealing compound residues on sealing faces or retaining agent residues, e.g., in tapped holes or on splines.
- Clean joining surfaces.
- Clean blind holes and blind hole threads.
- Lubricating bores, oil bores, oil ducts, bores for oil press fits and lubricating grooves must be free from dirt, preservatives and foreign matter. Check for free passage.
- Hose assemblies, tubes and joining elements must be free from dirt, oil and damage. Clean dirty or oily parts. Check for free passage. Replace damaged parts.
- Clean all cavities and reliefs.
- Remove preservatives from new parts.

3.6 Reusing parts

Authorized, trained and instructed staff assess whether parts can be reused. Replace parts in the following cases:

- Damage
- Wear, e.g., of bearings, multidisks, thrust washers
- Lasting deformation
- Overheating due to operation or disassembly
- Corroded parts

ZF Friedrichshafen AG
ZF Aftermarket
Metzer Straße 160
66117 Saarbrücken

Technical support
Telefon/Phone: +49 681 920-0
www.zf.com/contact
© ZF Friedrichshafen AG



ZF recommends replacing parts with original ZF parts or with parts approved by ZF. Please refer to the spare parts catalog for the ZF product.

3.7 Replacing parts

The following parts must always be replaced:

- Anti-fatigue bolts and seals
- Single-use parts
- Sealing rings
- Locking plates
- Shaft sealing rings

ZF recommends replacing parts with original ZF parts or with parts approved by ZF. Please refer to the spare parts catalog for the ZF product.

3.8 Reworking parts

Authorized, trained and instructed staff assess whether parts need to be reworked.

Minor damage to reusable parts can be removed and reworked with suitable auxiliaries, if operability of the part is not impaired.

Minor damage includes:

- Indentation marks on sealing faces
- Score marks or burrs caused by dismantling the ZF product
- Fretting corrosion
- Paint and corrosion damage

If rework is needed on spacer washers or shims because of clearance settings, ensure that the reworked surface is level with the initial face and has the same surface quality.

Debur all edges that may cause chip formation during assembly or pose a risk of injury. Remove burrs or other similar irregularities.

3.9 Cleanliness specifications for ZF-products with hydraulic components

Ensure cleanliness when performing repair and assembly works in the hydraulic system especially in the following areas:

- Hydraulic shift control unit
- Oil pump
- Oil filter (pressure filter)
- Oil supply

© ZF Friedrichshafen AG



- Valve body
- Oil feed flange

NOTICE

Dirt particles in the hydraulic system may cause malfunctions.
⇨ Ensure cleanliness when performing repair and assembly works.

The following requirements must be observed for the work process and the workshop equipment:

- Install separate cleaning processes for the parts of the hydraulic system and other parts (e. g. outer parts).
- Avoid using mechanical stroke and blow processes. In case it cannot be avoided: Use impact adapter with large stroke/impact face.
- Parts made of Fe metals must be demagnetized.
- Only use cleaning cloths which do not fray.
- When applying operating supplies and auxiliary materials, only use high-quality, wear-resistant brushes whose bristles do not fall out (e.g. silicone brushes).
- Use operating supplies and auxiliary materials with the specified purity only (e.g. lubricants, jointing compound, compressed air for inspection processes, etc.).
- Cover operating supplies and auxiliary materials before and after use.
- Store and transport ready-to-install components and assembly groups when properly covered.
- Fixtures must be designed and used in such a way that mechanical damage of the part or the ZF product is excluded and the fixture does not suffer from excessive wear.
- Avoid ingress and utilization of easily distributable auxiliary materials in the working area (e.g. wood, Styrofoam, fiber plates, waxed paper).
- Chip-cutting machining and the blowing out of parts with compressed air has to be performed in a separate room and must not be performed in the working area.

Observe the following specifications for the workshop equipment:

- Design support surfaces for parts and tools in such a way that no deposits may accumulate (e.g. grate, perforated sheet metal).
- Work surfaces must be abrasion-proof and easy to clean (e.g., V4A sheets with rubber pads).
- If possible, make sure that work surfaces do not have any inaccessible corners and recesses.
- Workshop equipment (e.g., cabinets, racks, workbenches) and its respective arrangement in the room must always be designed in such a way that proper cleaning of the room and floor is possible.
- The floor must be easy to clean (e.g. use of abrasion-proof sealing).
- Vacuum-clean the floor regularly – do not sweep.
- Regularly wet-clean the floor.

ZF Friedrichshafen AG
ZF Aftermarket
Metzer Straße 160
66117 Saarbrücken

Technical support
Telefon/Phone: +49 681 920-0
www.zf.com/contact
© ZF Friedrichshafen AG

4 Removing and Dismantling Mechatronic

4.1 Removing Mechatronic

Requirements:
- Vehicle-specific disassembly work has been completed

1. Drain the transmission oil
2. Disassemble oil pan and remove oil filter from Mechatronic.
3. Unlock and lever out transmission connector.
4. Unscrew Mechatronic mounting bolts and remove Mechatronic.

4.2 Dismantling Mechatronic

Requirements:
- Mechatronic has been removed from transmission

Valve plate contains small parts that may fall out. Before separating, turn the valve housing upwards.

1. For shift by wire, disconnect the electric plug connection of the parking lock valve.
2. Loosen and remove screws of electronics module.
3. Lift off electronics module.

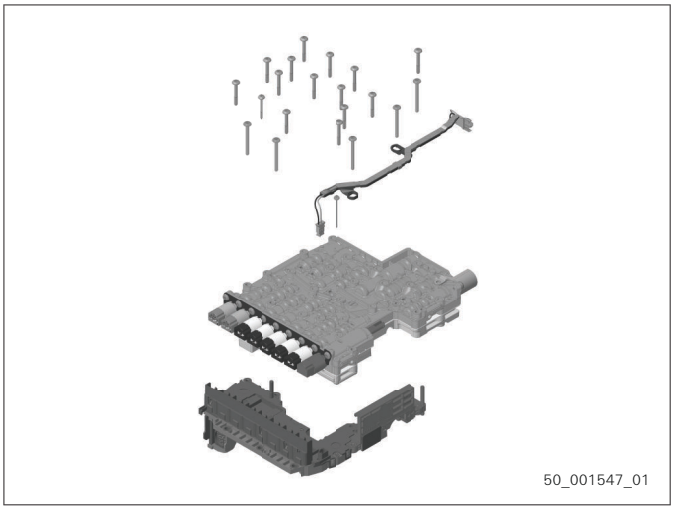

Fig. 6

© ZF Friedrichshafen AG

4. Separate valve plate and valve housing. Lift off intermediate sheet.

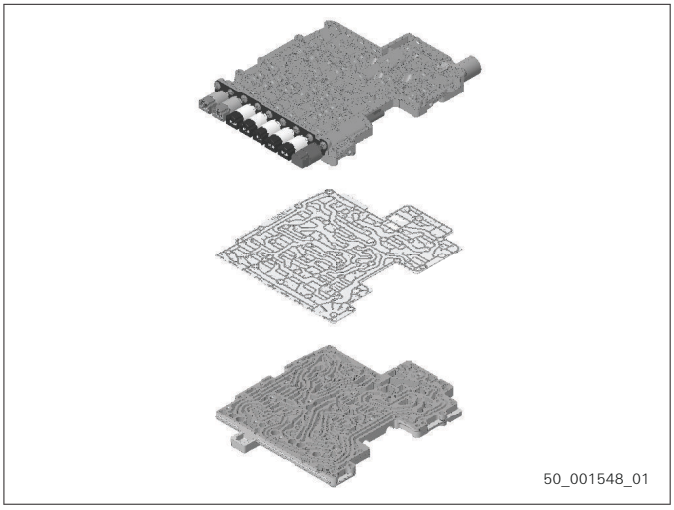

Fig. 7

5.

NOTICE

Mechanical damage to valve plate and valve housing possible.

⇨ Only position the lever tool at the designated points (see figure).

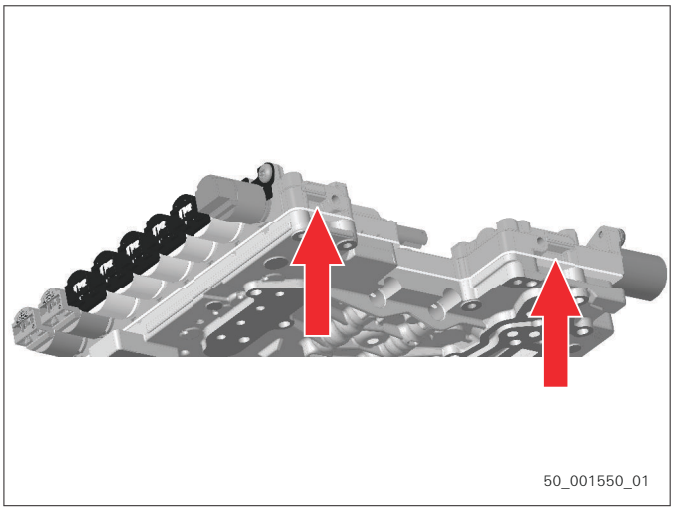

Fig. 8

6. Unscrew screws on fixing plate and remove fixing plate.

7. Remove pressure regulator and remove all shift elements.

8. Carefully clean valve housing and valve plate.

9. Install new shift elements according to the figures in the following chapter.

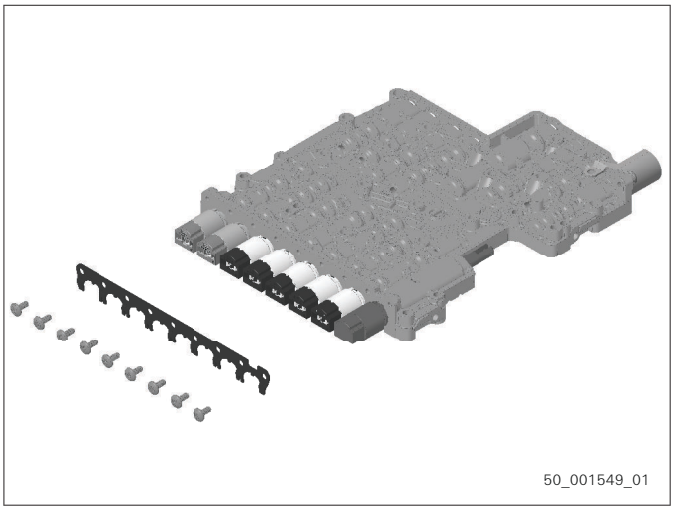

Fig. 9

© ZF Friedrichshafen AG

5 Illustration of Spare Parts Kits

The position and installation position of the individual parts can be found in the following figures. Ensure the correct assignment of the valve kits.

ZF Friedrichshafen AG
ZF Aftermarket
Metzer Straße 160
66117 Saarbrücken

Technical support
Telefon/Phone: +49 681 920-0
www.zf.com/contact

© ZF Friedrichshafen AG

5.1 1068.298.600 - valve housing

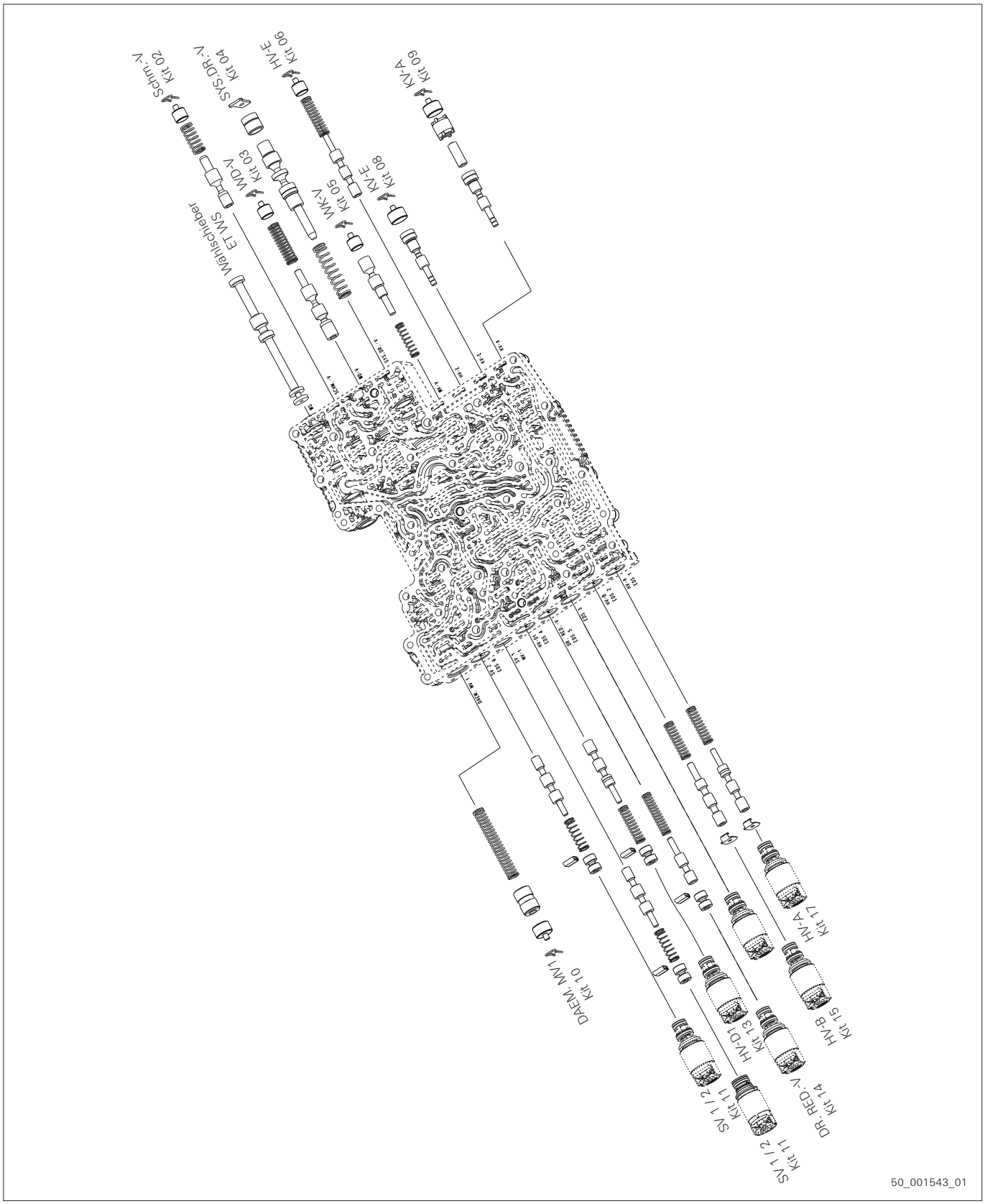

Fig. 10 1068.298.600

© ZF Friedrichshafen AG

5.2 1068.298.600 - valve plate

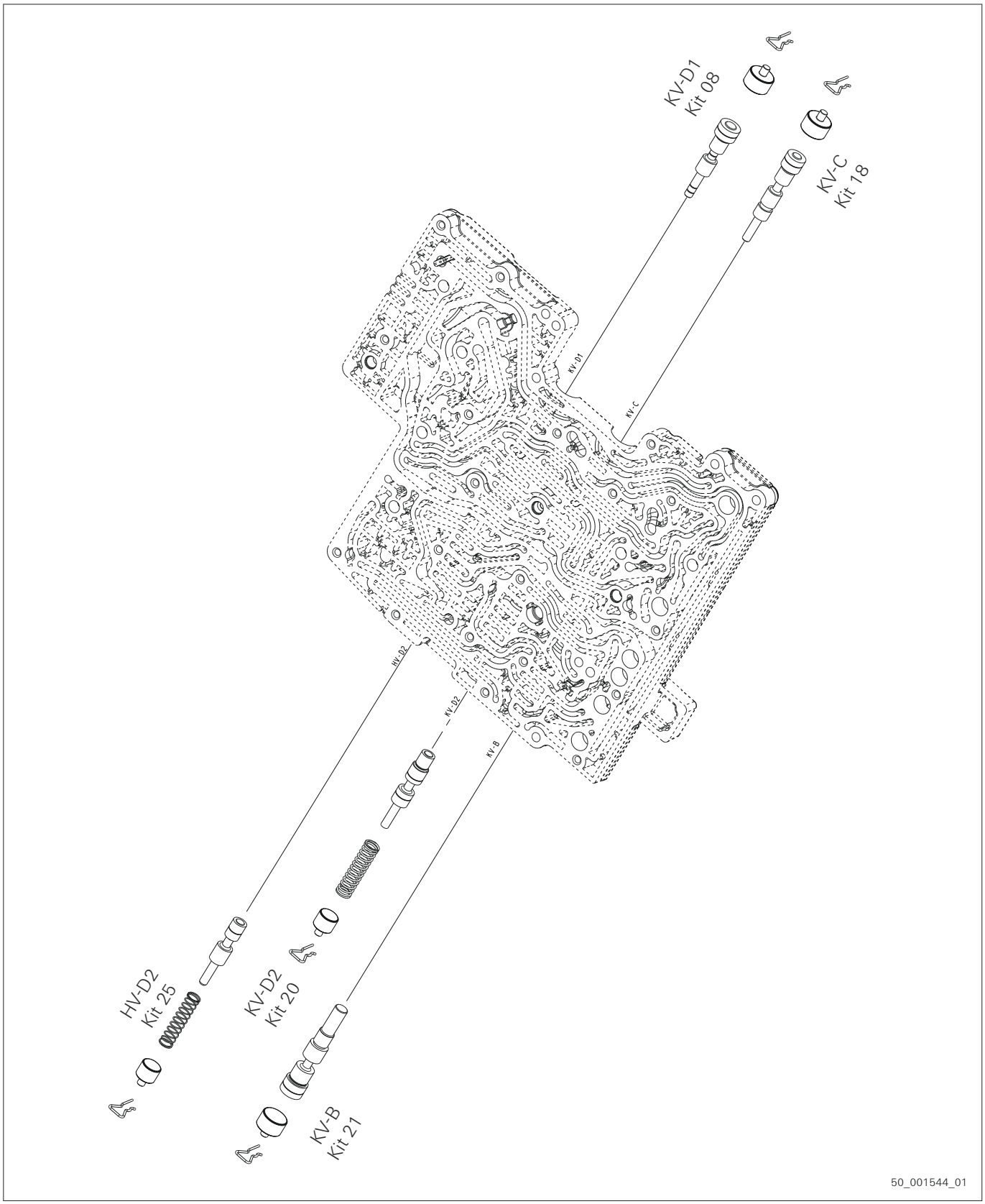

Fig. 11 1068.298.600

© ZF Friedrichshafen AG

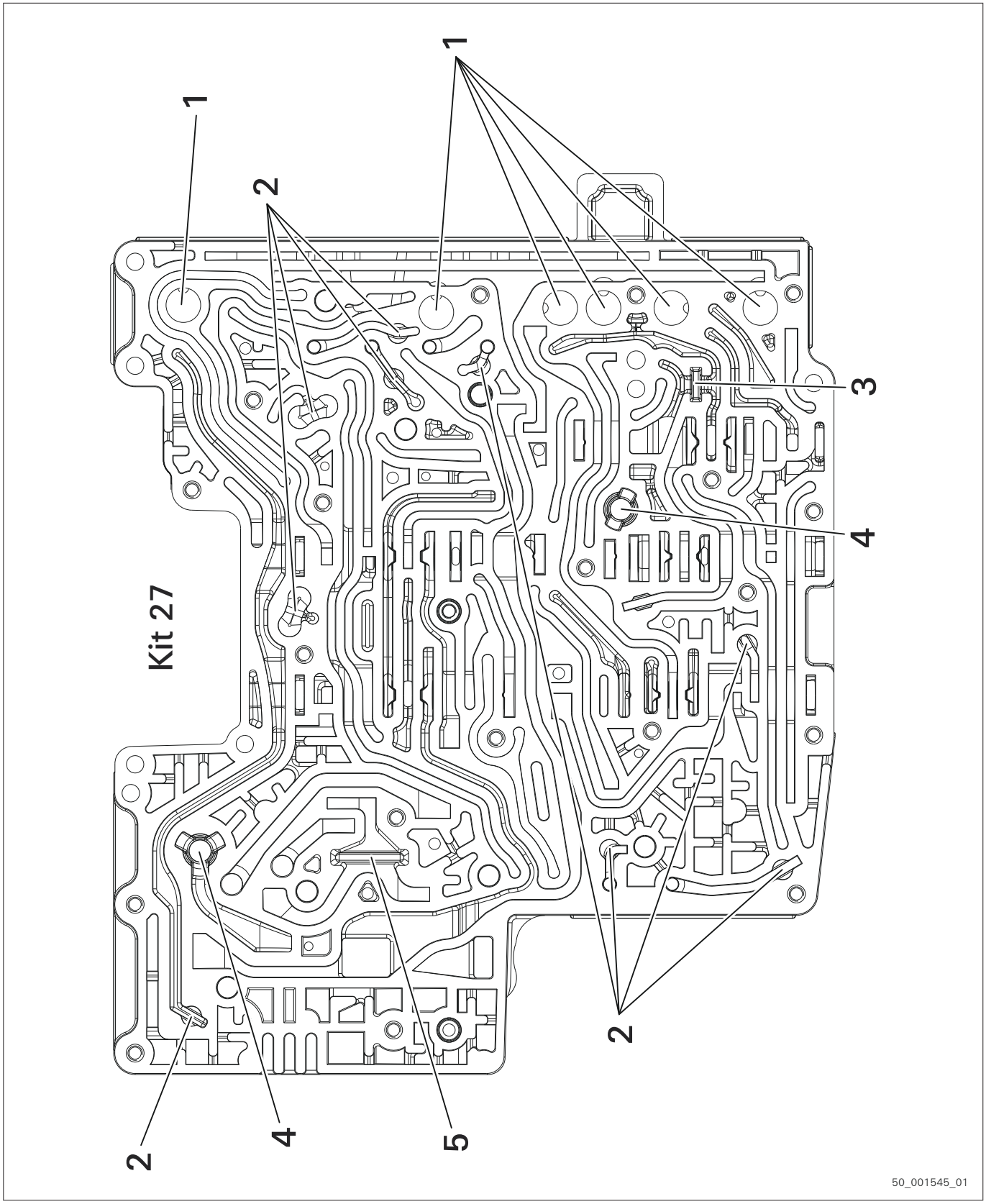

Fig. 12 1068.298.600

ZF Friedrichshafen AG
ZF Aftermarket
Metzer Straße 160
66117 Saarbrücken

Technical support
Telefon/Phone: +49 681 920-0
www.zf.com/contact

© ZF Friedrichshafen AG

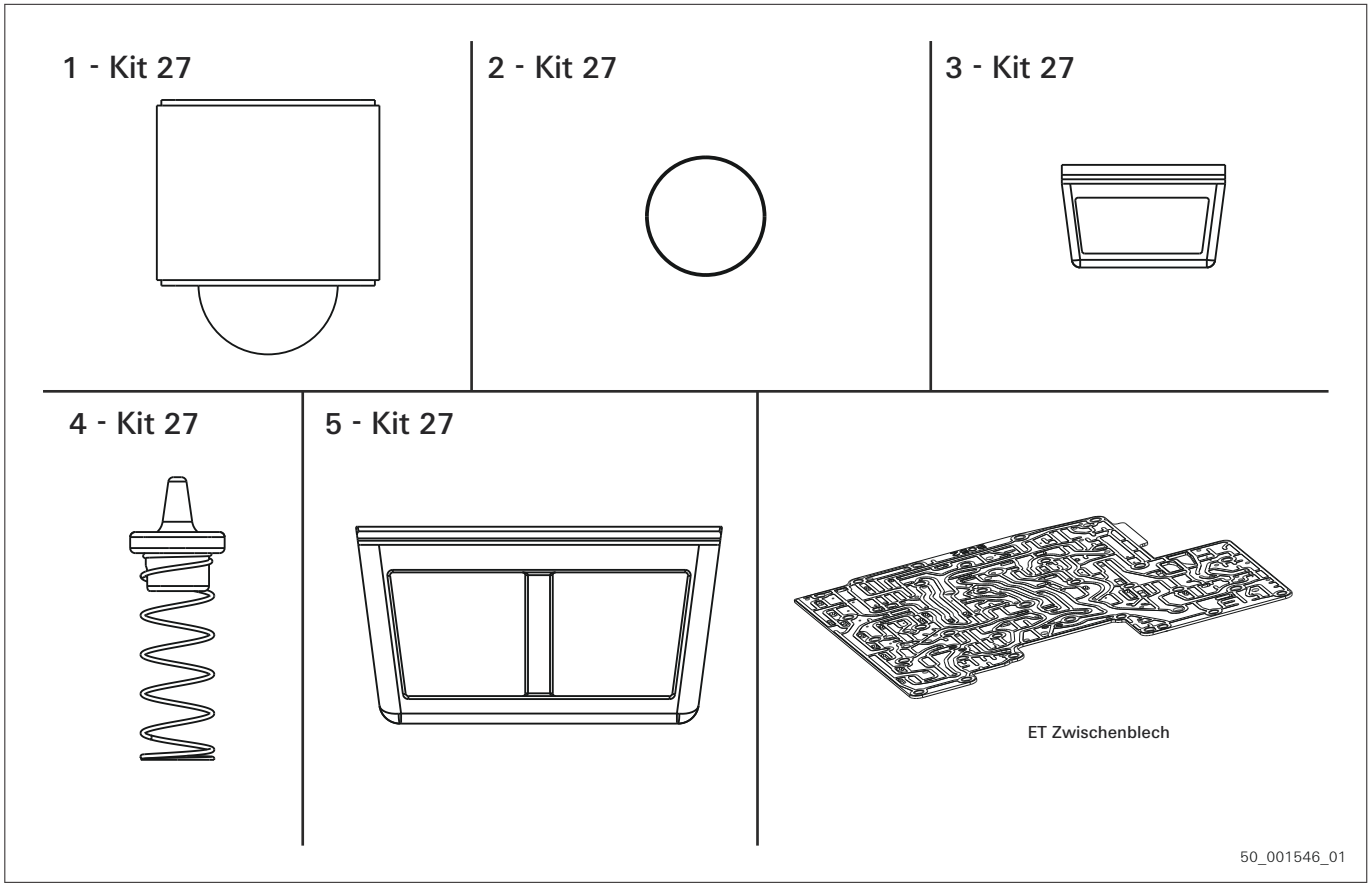

Fig. 13 1068.298.600

ZF Friedrichshafen AG
ZF Aftermarket
Metzer Straße 160
66117 Saarbrücken

Technical support
Telefon/Phone: +49 681 920-0
www.zf.com/contact

© ZF Friedrichshafen AG

5.3 1068.298.601 - valve housing

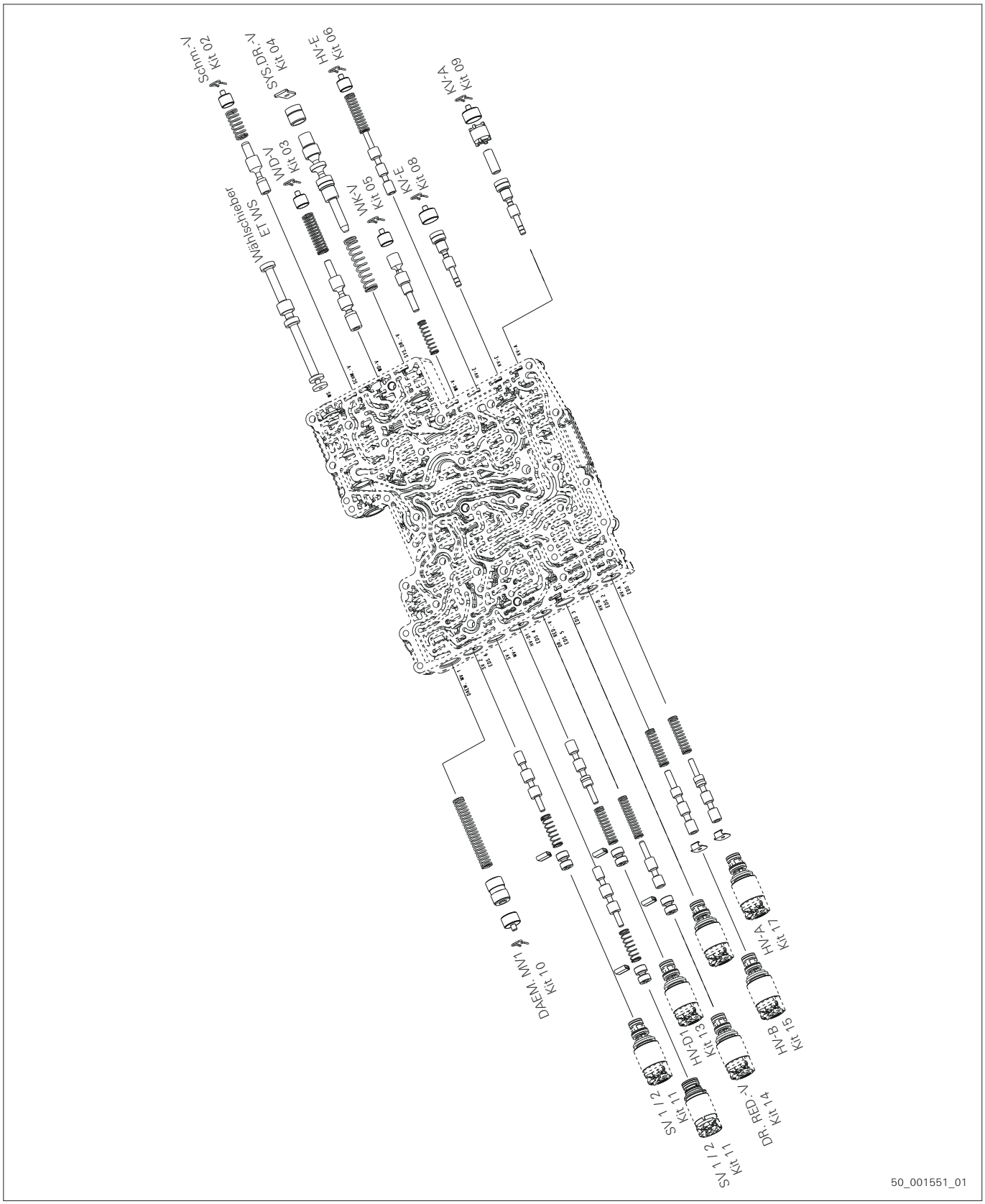

Fig. 14 1068.298.601

© ZF Friedrichshafen AG

5.4 1068.298.601 - valve plate

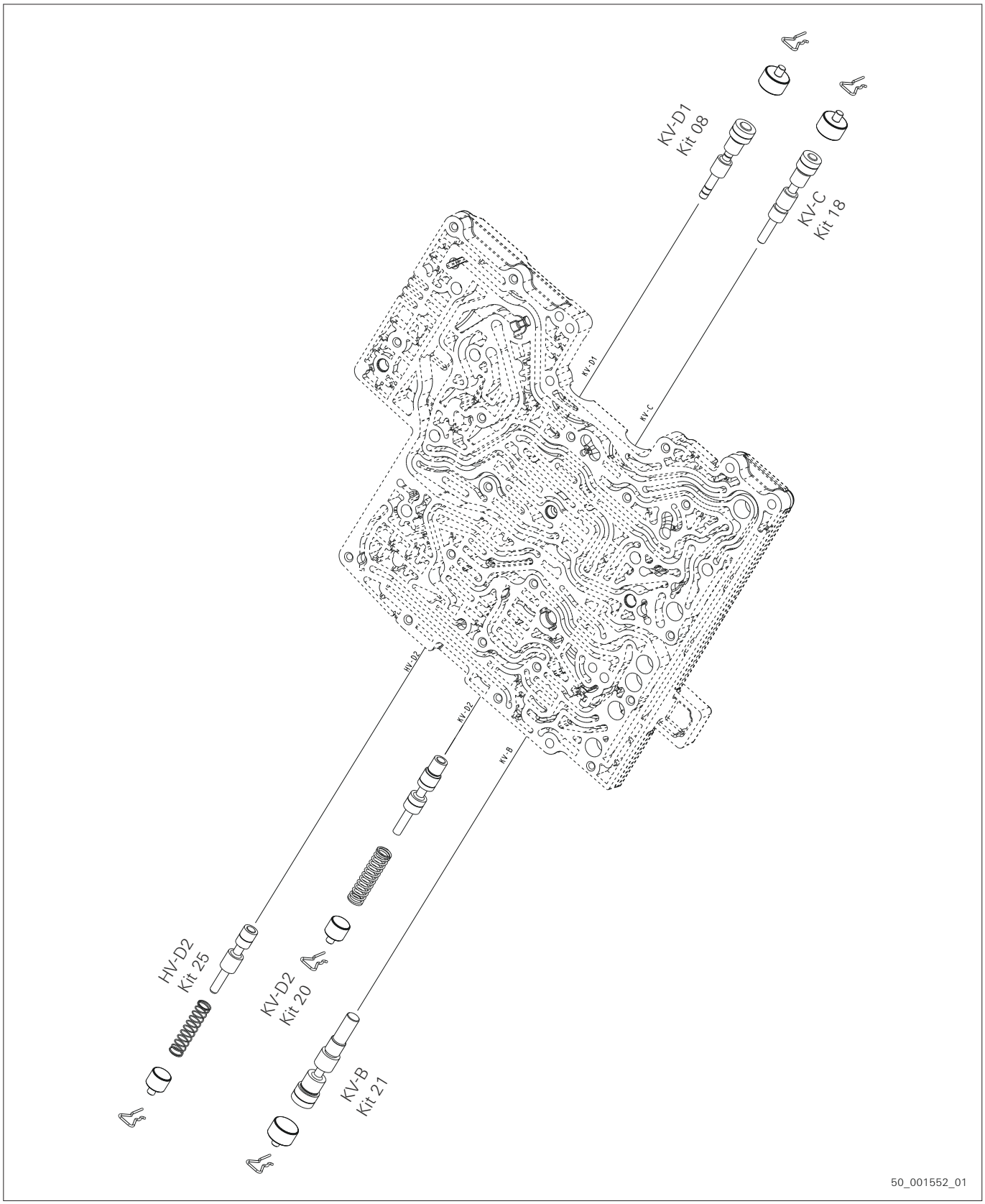

Fig. 15 1068.298.601

© ZF Friedrichshafen AG

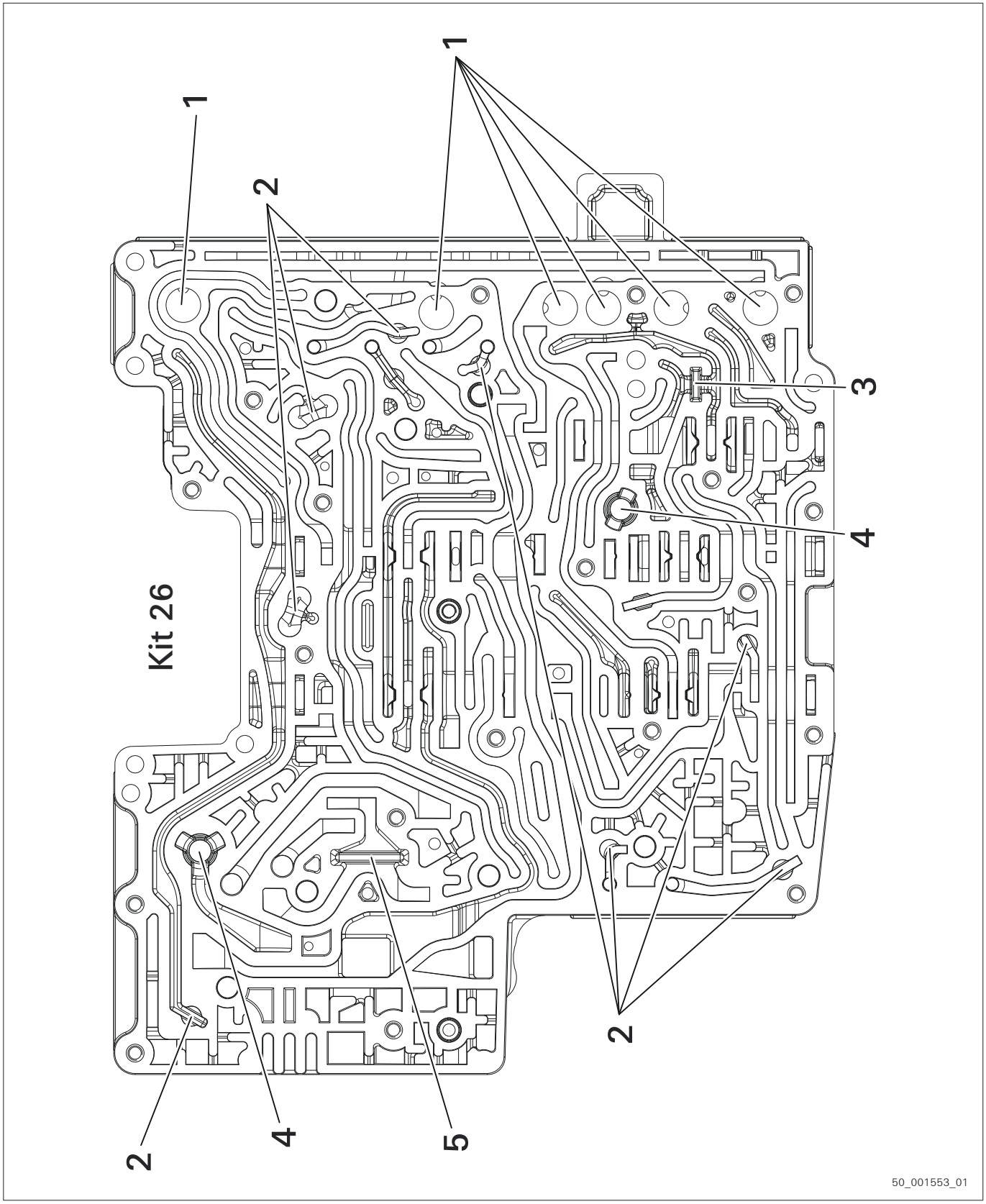

Fig. 16 1068.298.601

ZF Friedrichshafen AG
ZF Aftermarket
Metzer Straße 160
66117 Saarbrücken

Technical support
Telefon/Phone: +49 681 920-0
www.zf.com/contact

© ZF Friedrichshafen AG

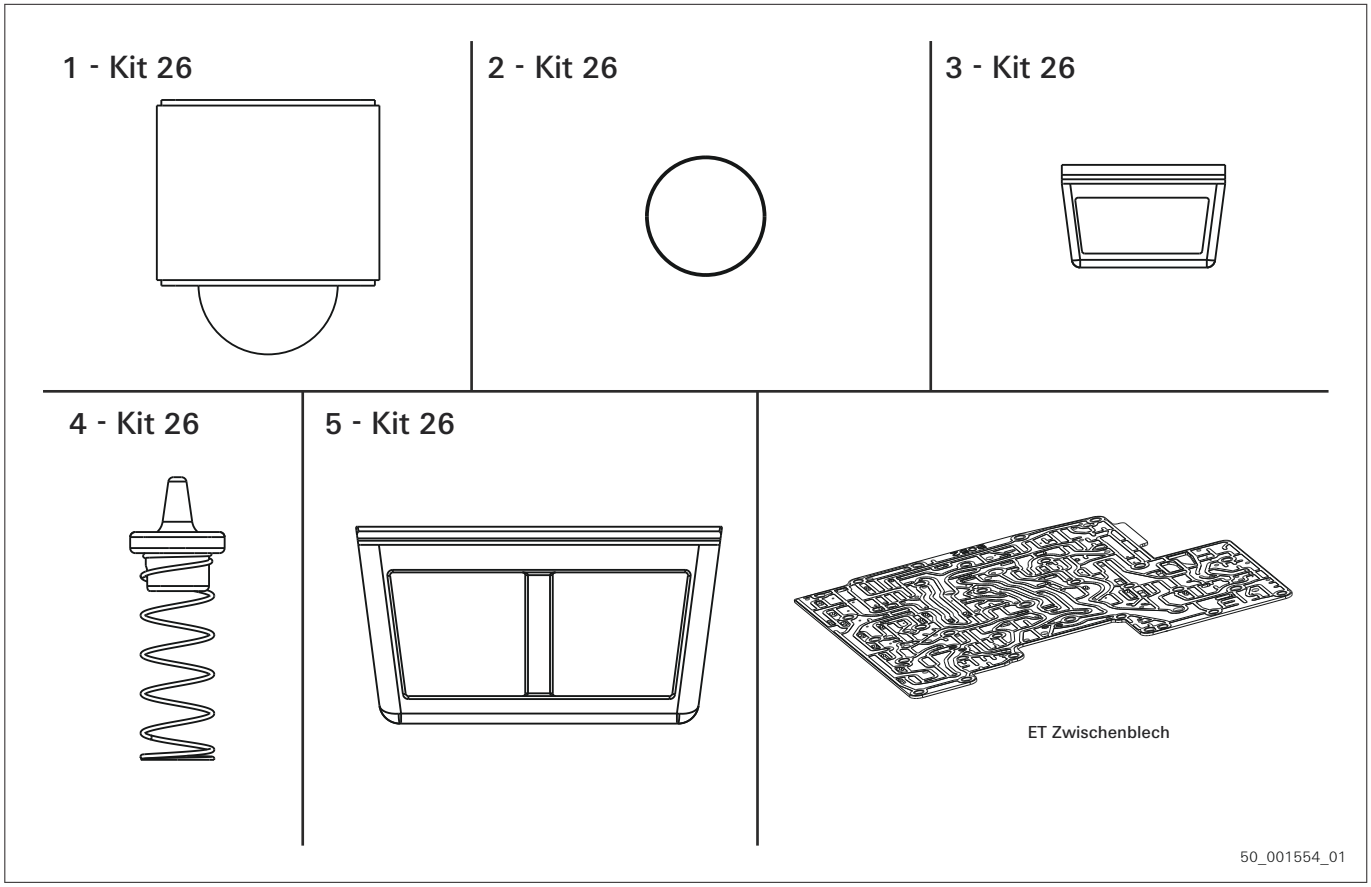

Fig. 17 1068.298.601

ZF Friedrichshafen AG
ZF Aftermarket
Metzer Straße 160
66117 Saarbrücken

Technical support
Telefon/Phone: +49 681 920-0
www.zf.com/contact

© ZF Friedrichshafen AG

5.5 1068.298.602 - valve housing

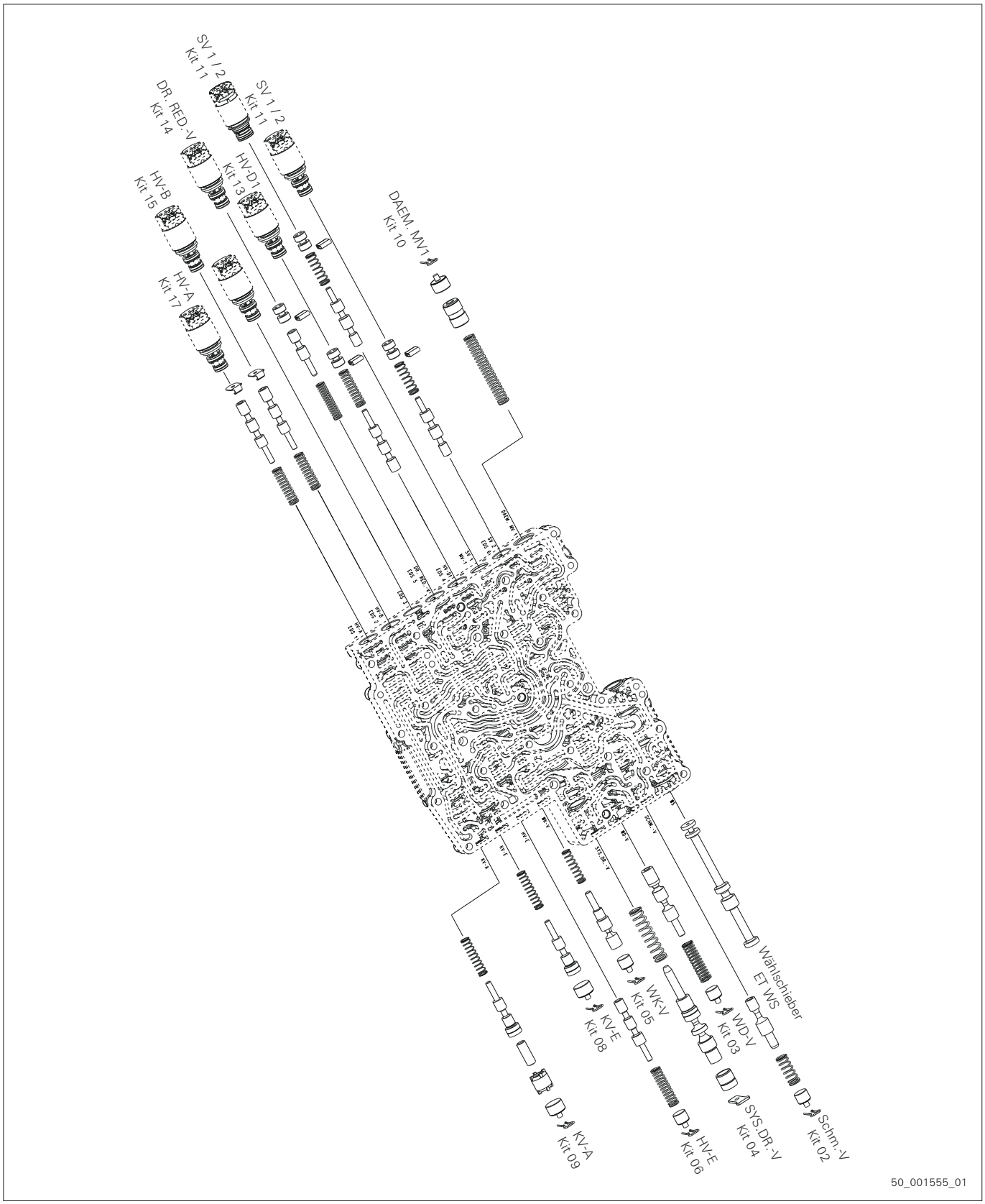

Fig. 18 1068.298.602

© ZF Friedrichshafen AG

5.6 1068.298.602 - valve plate

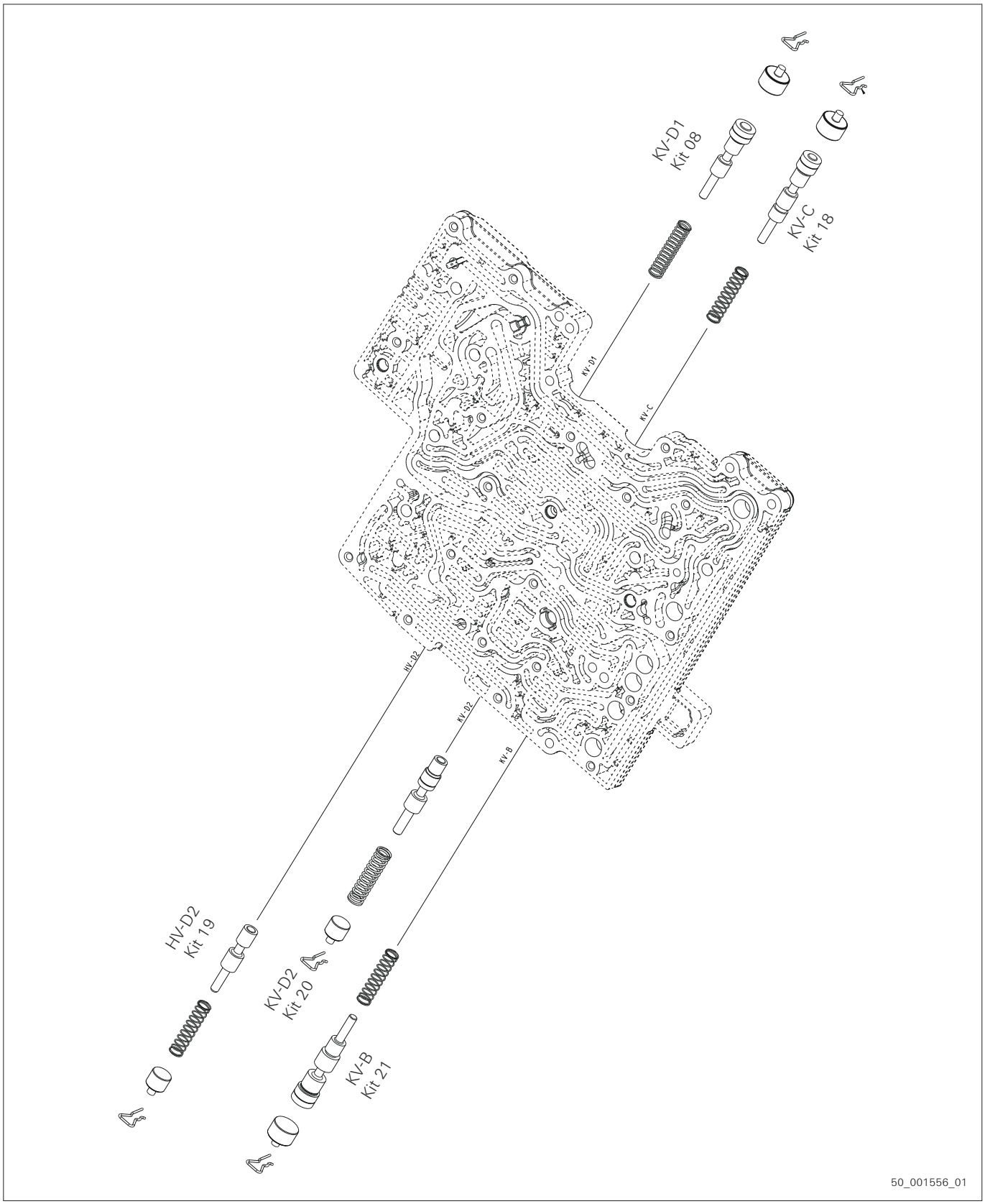

Fig. 19 1068.298.602

© ZF Friedrichshafen AG

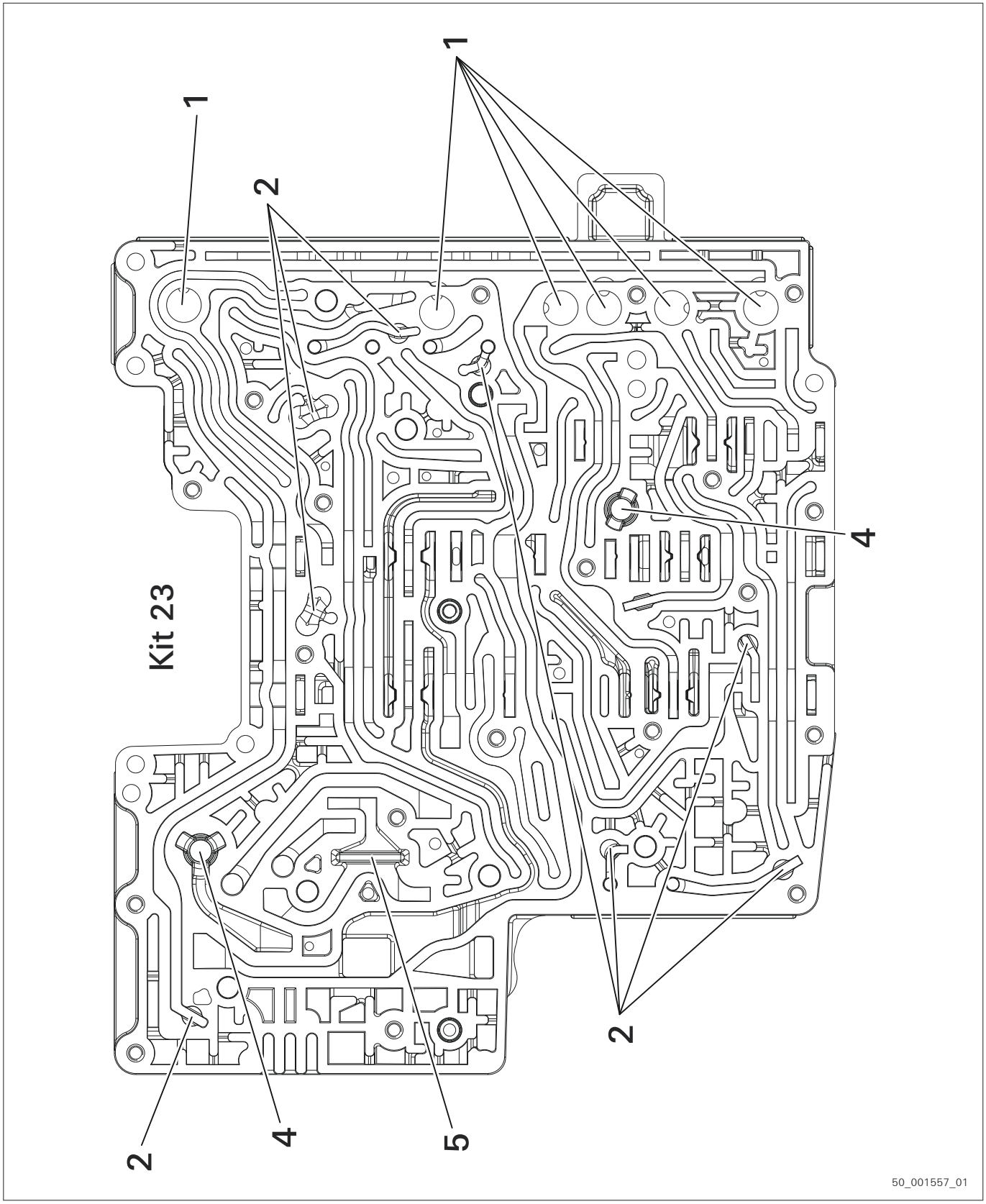

Fig. 20 1068.298.602

ZF Friedrichshafen AG
ZF Aftermarket
Metzer Straße 160
66117 Saarbrücken

Technical support
Telefon/Phone: +49 681 920-0
www.zf.com/contact

© ZF Friedrichshafen AG

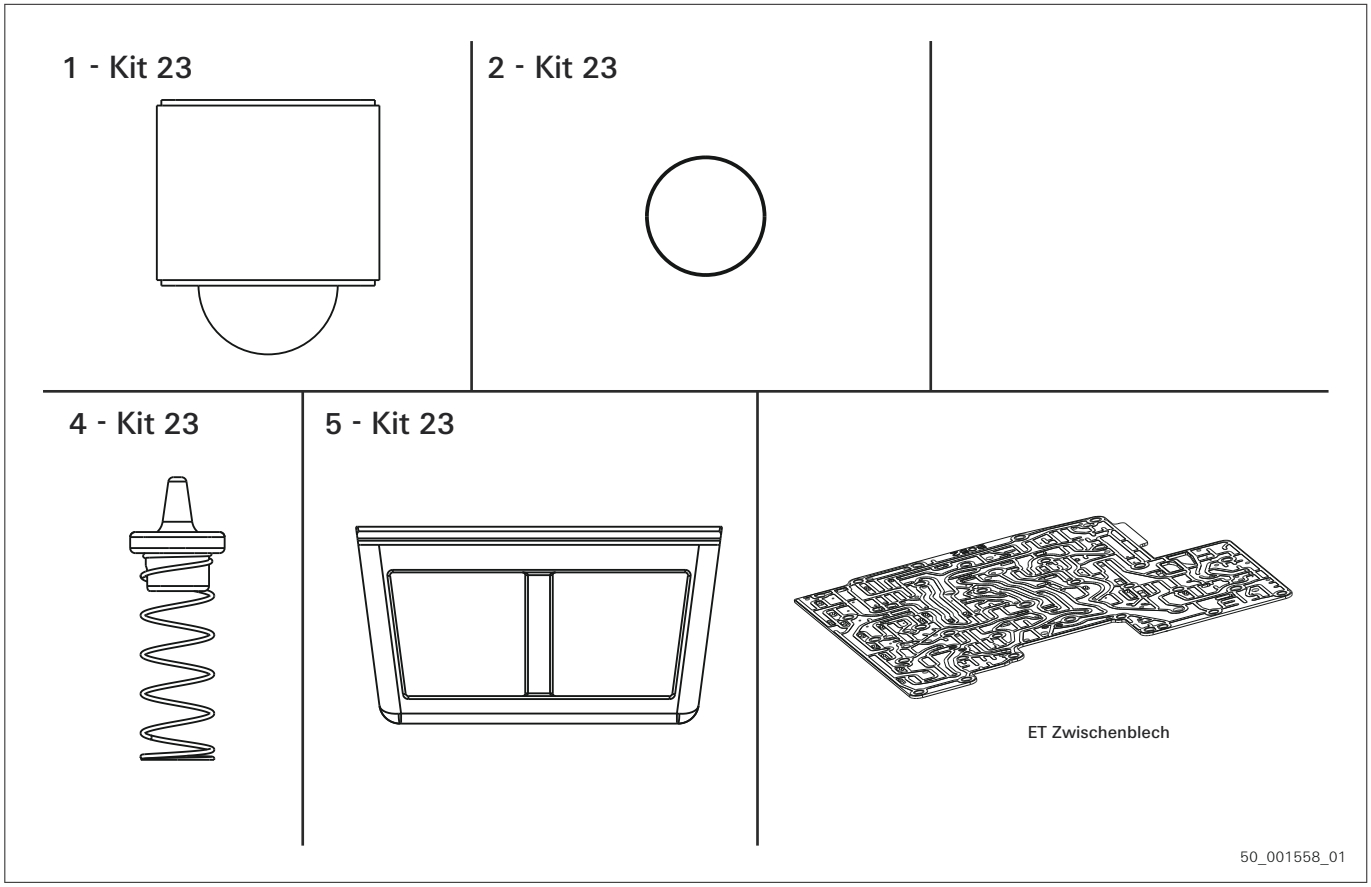

Fig. 21 1068.298.602 | 1068.298.603 | 1068.298.604

© ZF Friedrichshafen AG

5.7 1068.298.603 - valve housing

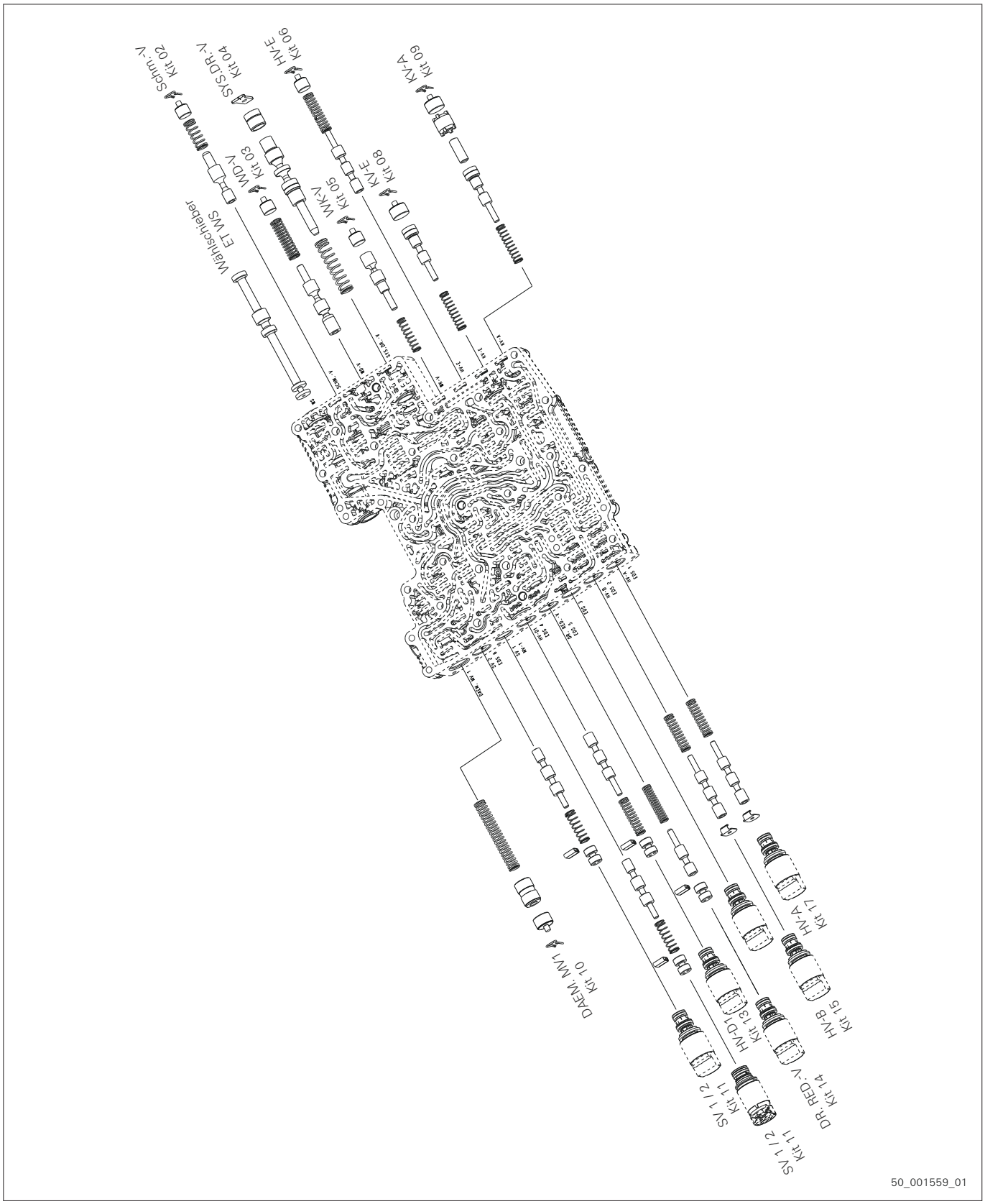

Fig. 22 1068.298.603

© ZF Friedrichshafen AG

5.8 1068.298.603 - valve plate

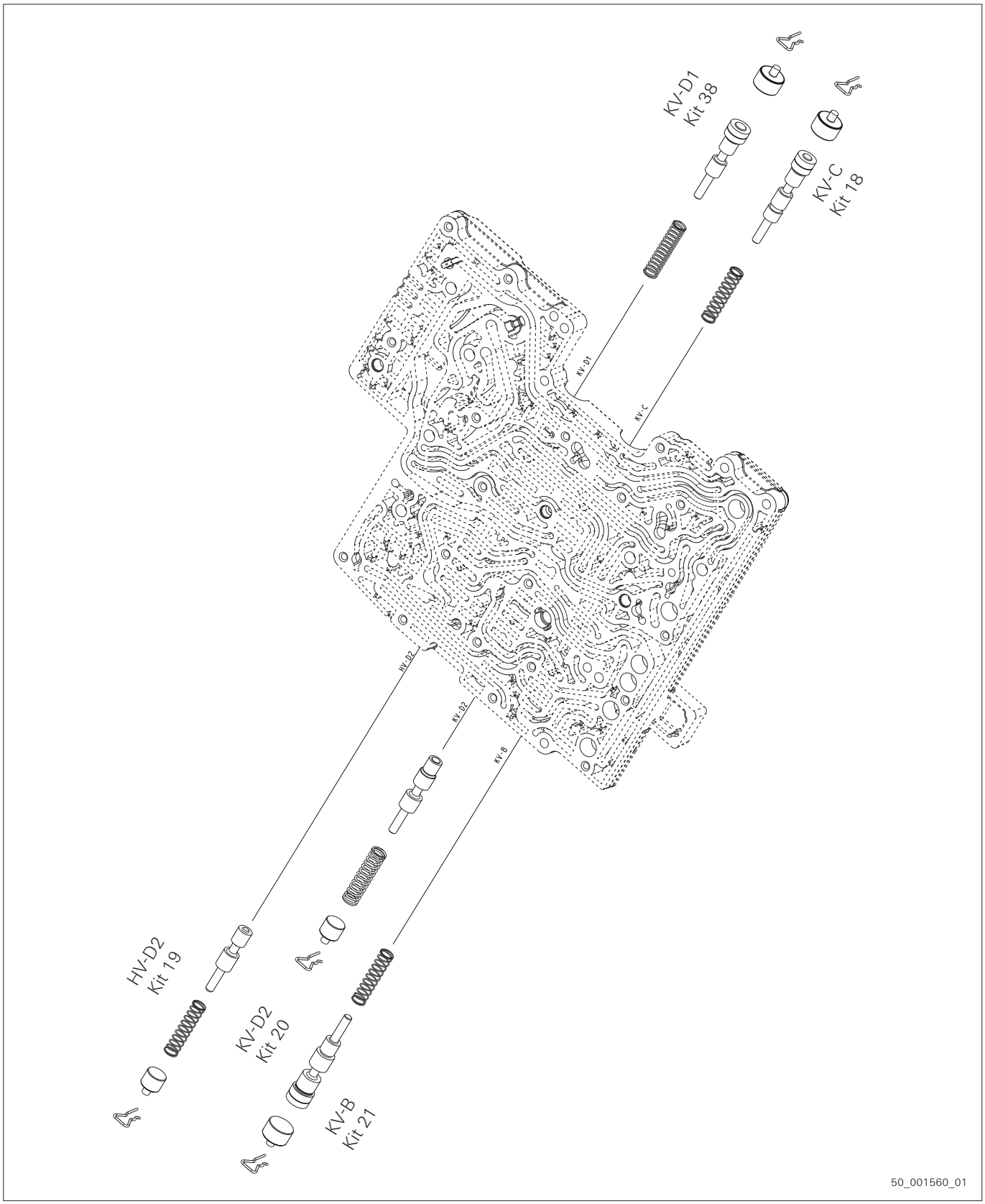

Fig. 23 1068.298.603

© ZF Friedrichshafen AG

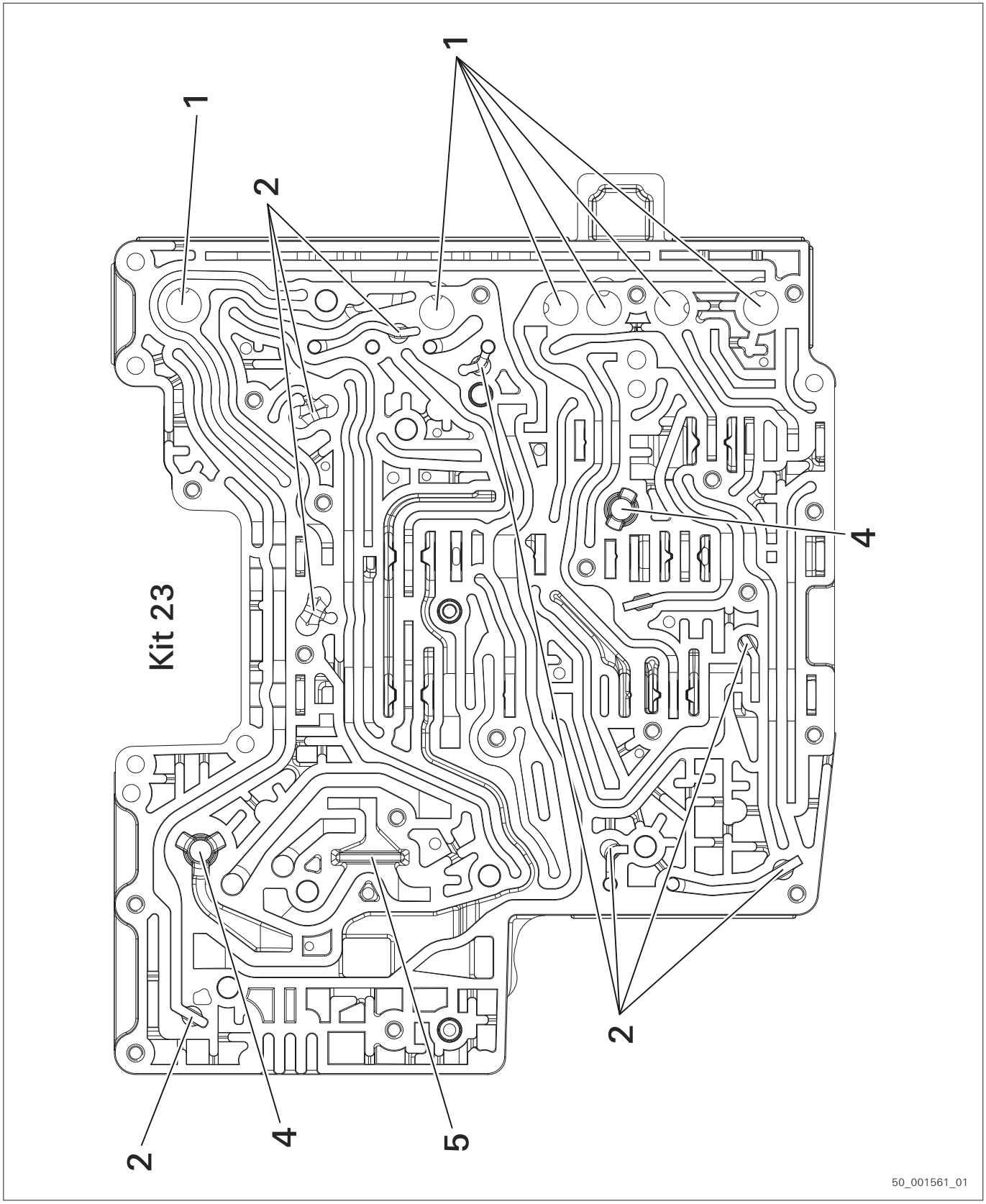

Fig. 24 1068.298.603

ZF Friedrichshafen AG
ZF Aftermarket
Metzer Straße 160
66117 Saarbrücken

Technical support
Telefon/Phone: +49 681 920-0
www.zf.com/contact

© ZF Friedrichshafen AG

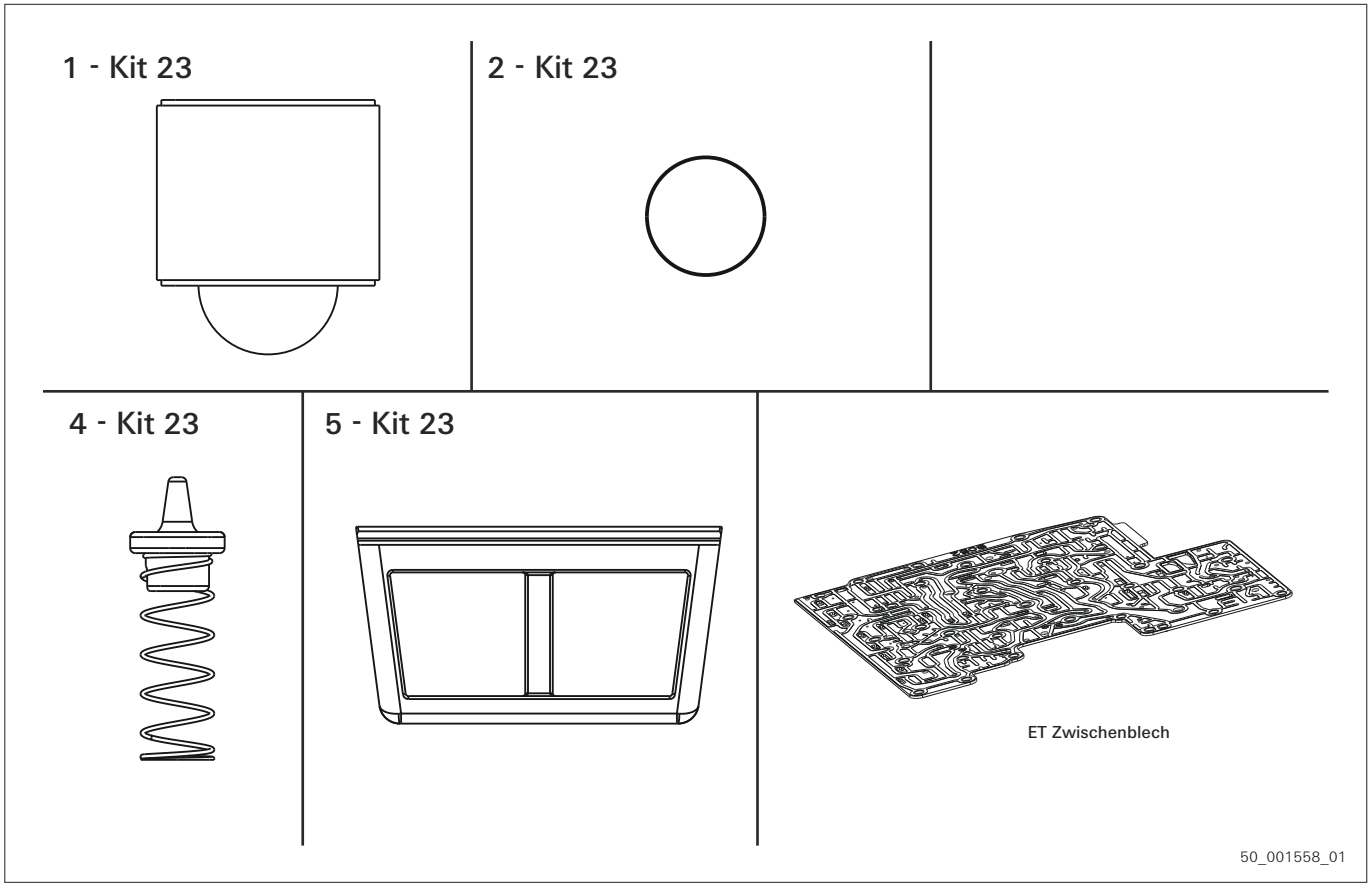

Fig. 25 1068.298.602 | 1068.298.603 | 1068.298.604

ZF Friedrichshafen AG
ZF Aftermarket
Metzer Straße 160
66117 Saarbrücken

Technical support
Telefon/Phone: +49 681 920-0
www.zf.com/contact

© ZF Friedrichshafen AG

5.9 1068.298.604 - valve housing

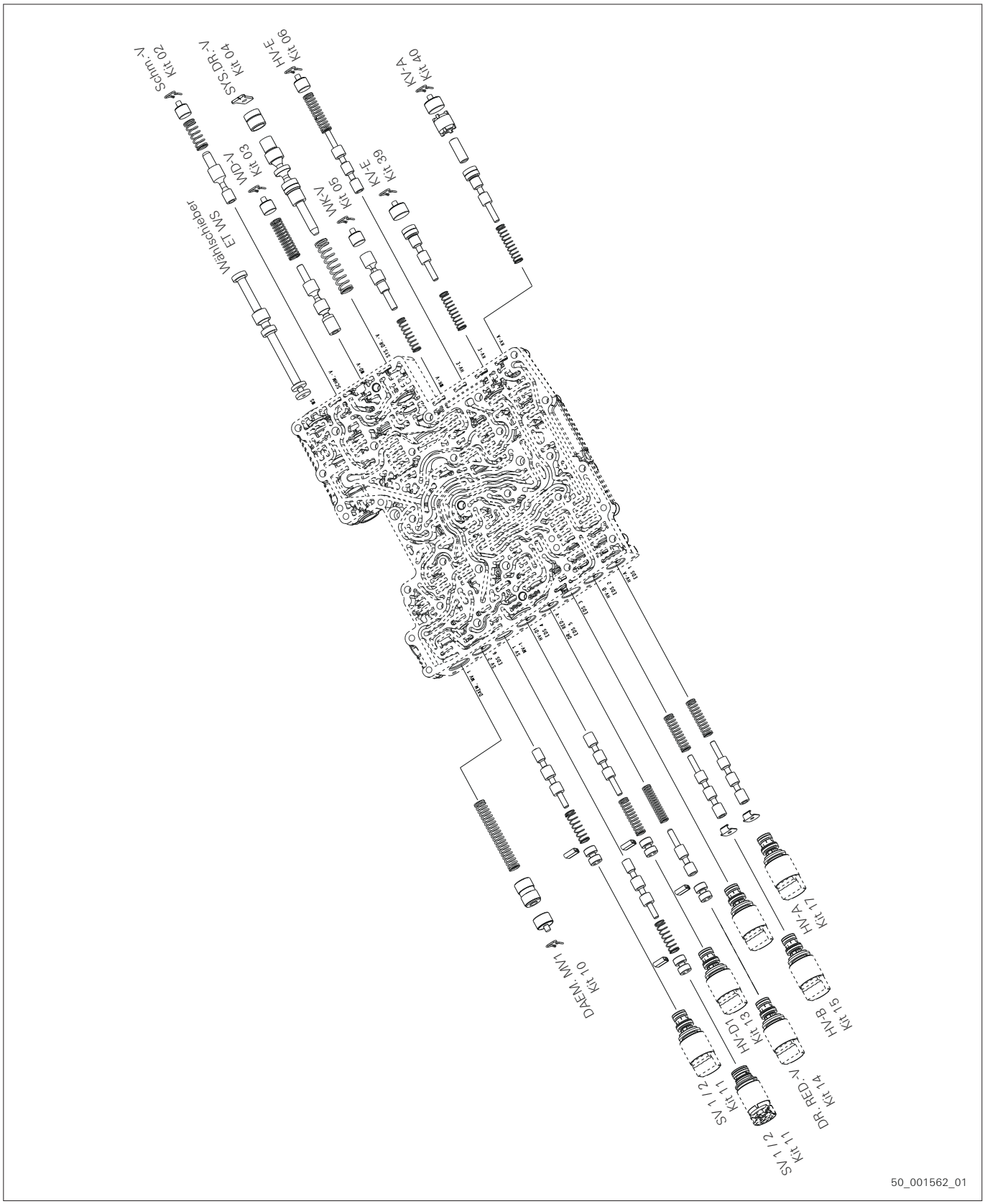

Fig. 26 1068.298.604

© ZF Friedrichshafen AG

5.10 1068.298.604 - valve plate

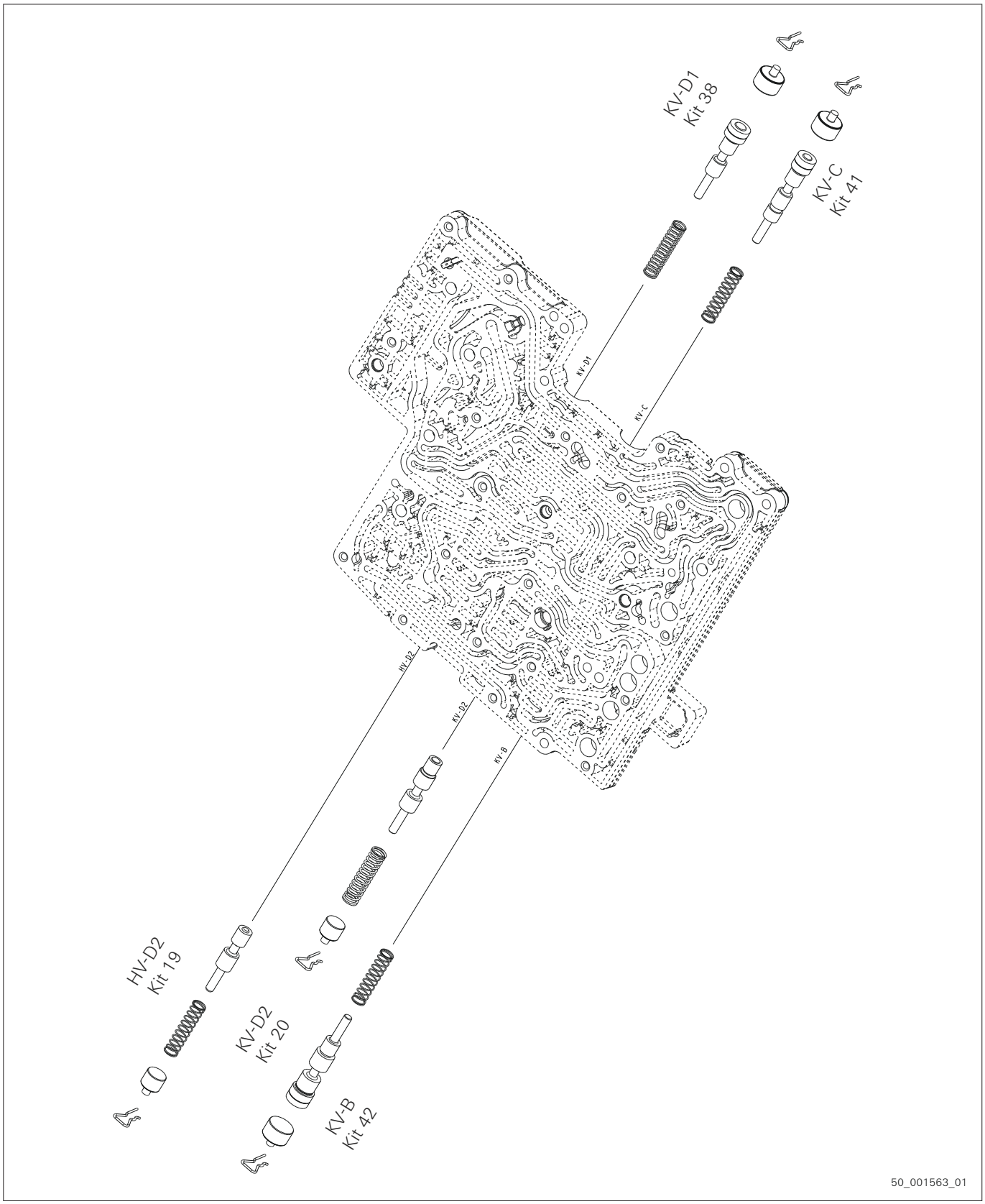

Fig. 27 1068.298.604

© ZF Friedrichshafen AG

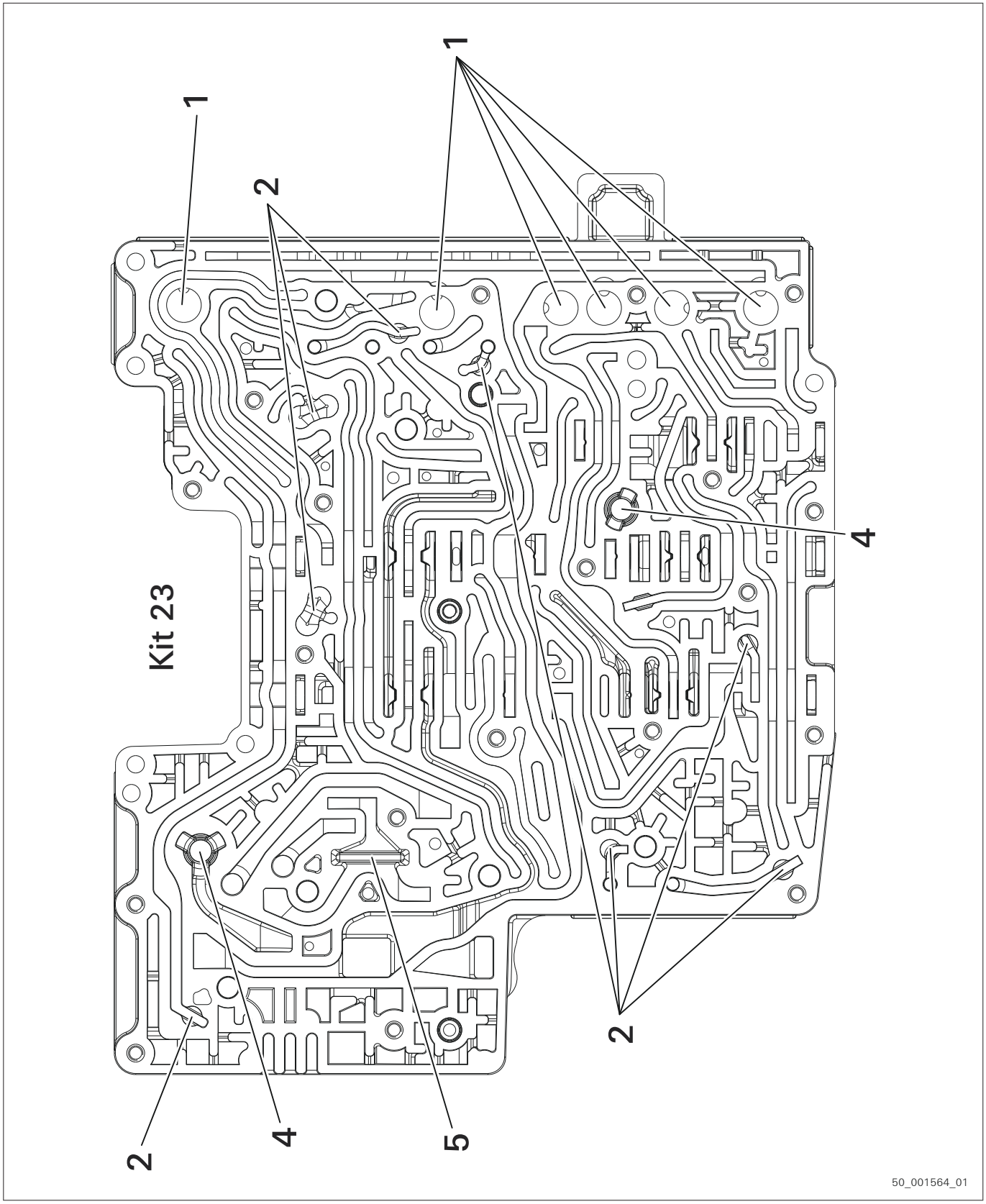

Fig. 28 1068.298.604

© ZF Friedrichshafen AG

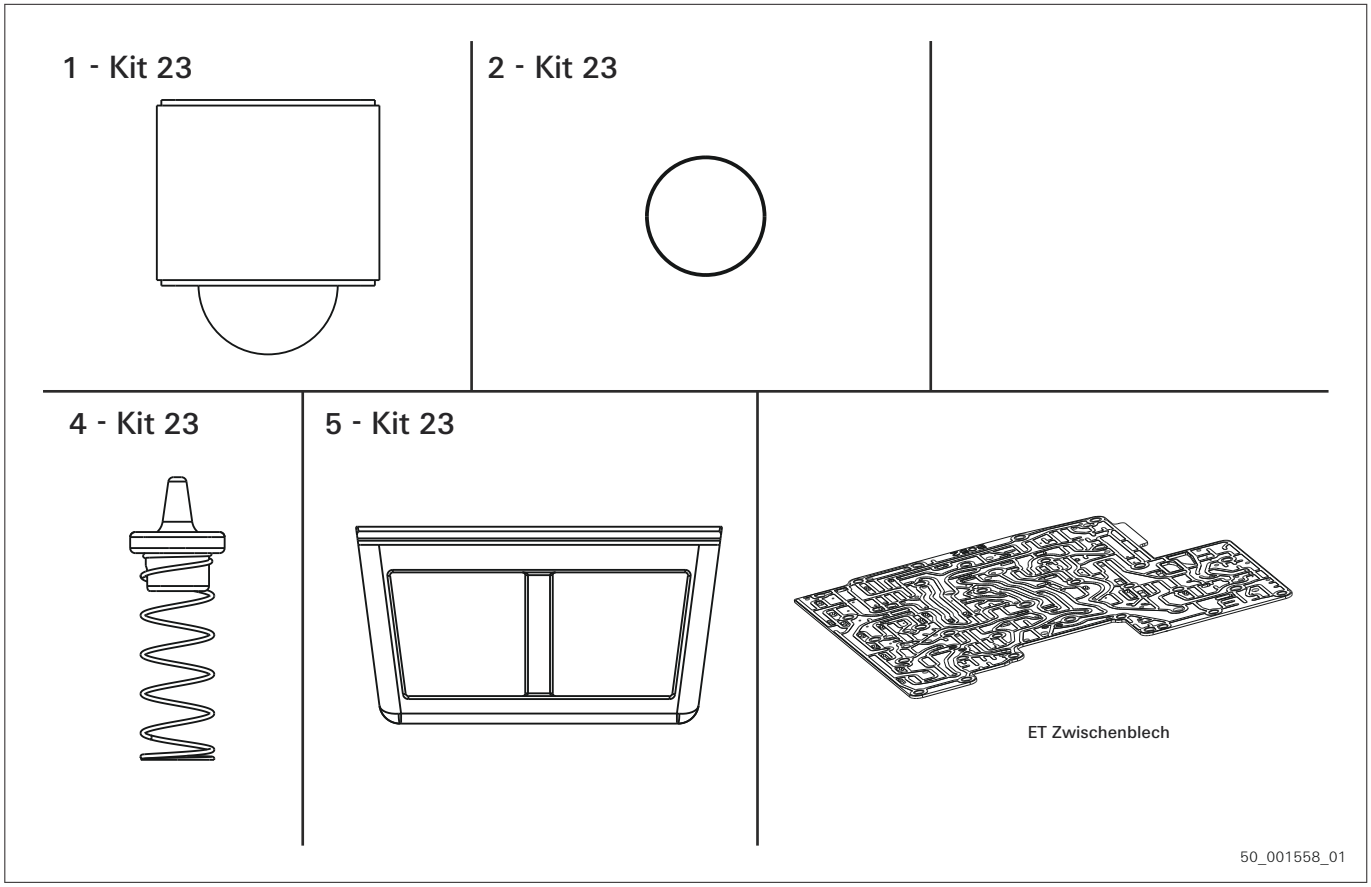

Fig. 29 1068.298.602 | 1068.298.603 | 1068.298.604

ZF Friedrichshafen AG
ZF Aftermarket
Metzer Straße 160
66117 Saarbrücken

Technical support
Telefon/Phone: +49 681 920-0
www.zf.com/contact

© ZF Friedrichshafen AG

5.11 1068.298.605 - valve housing

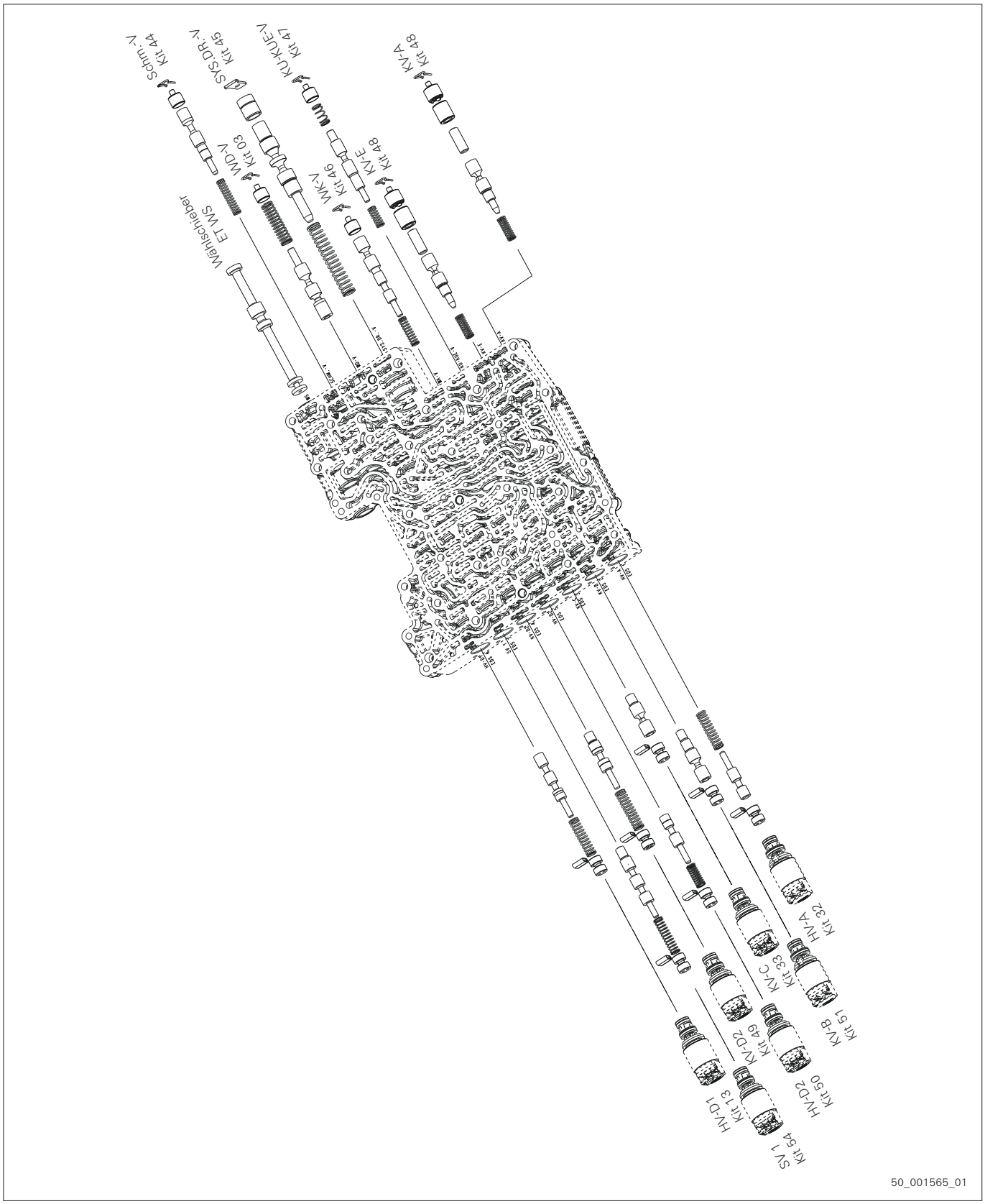

Fig. 30 1068.298.605

© ZF Friedrichshafen AG

5.12 1068.298.605 - valve plate

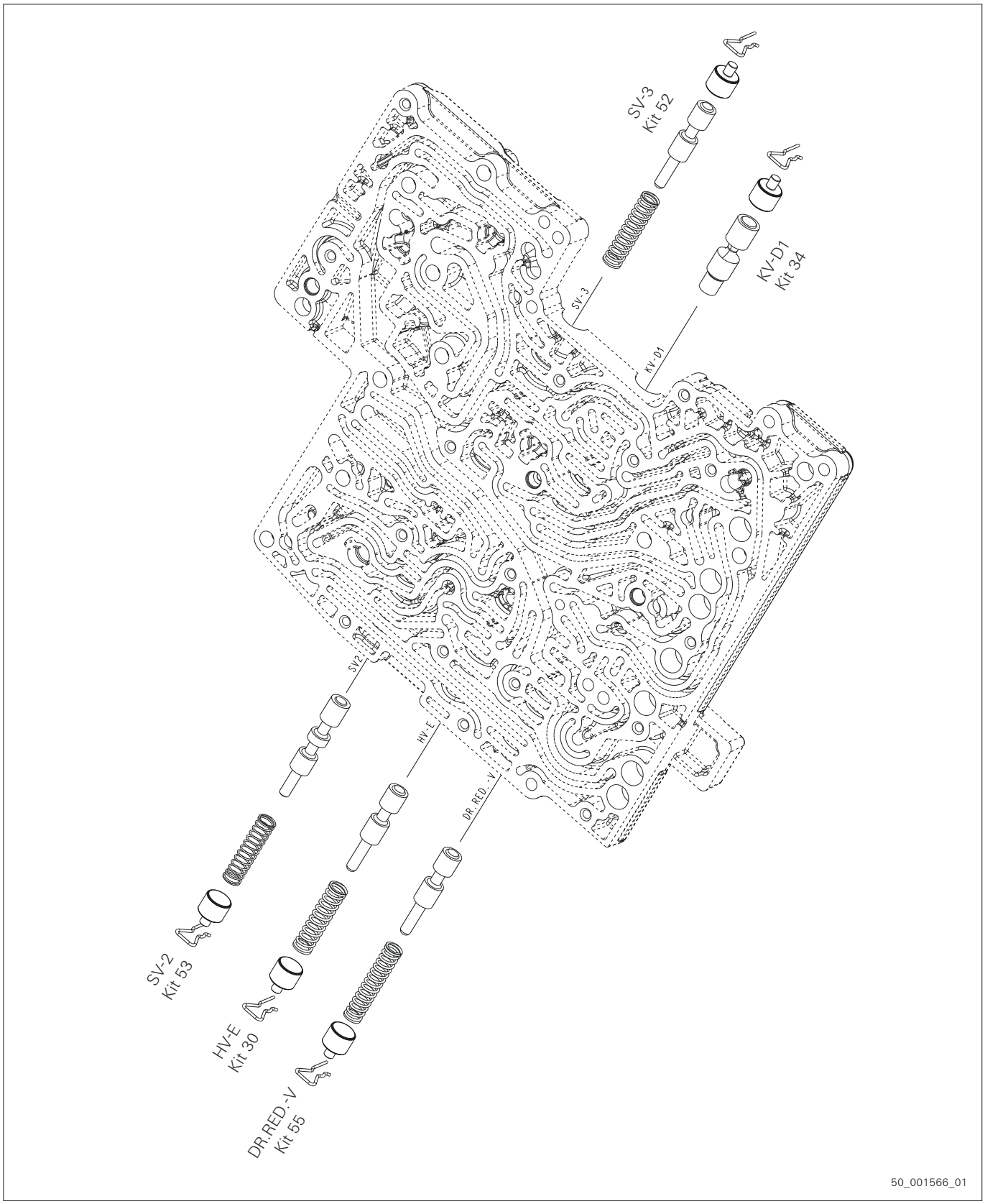

Fig. 31 1068.298.605

© ZF Friedrichshafen AG

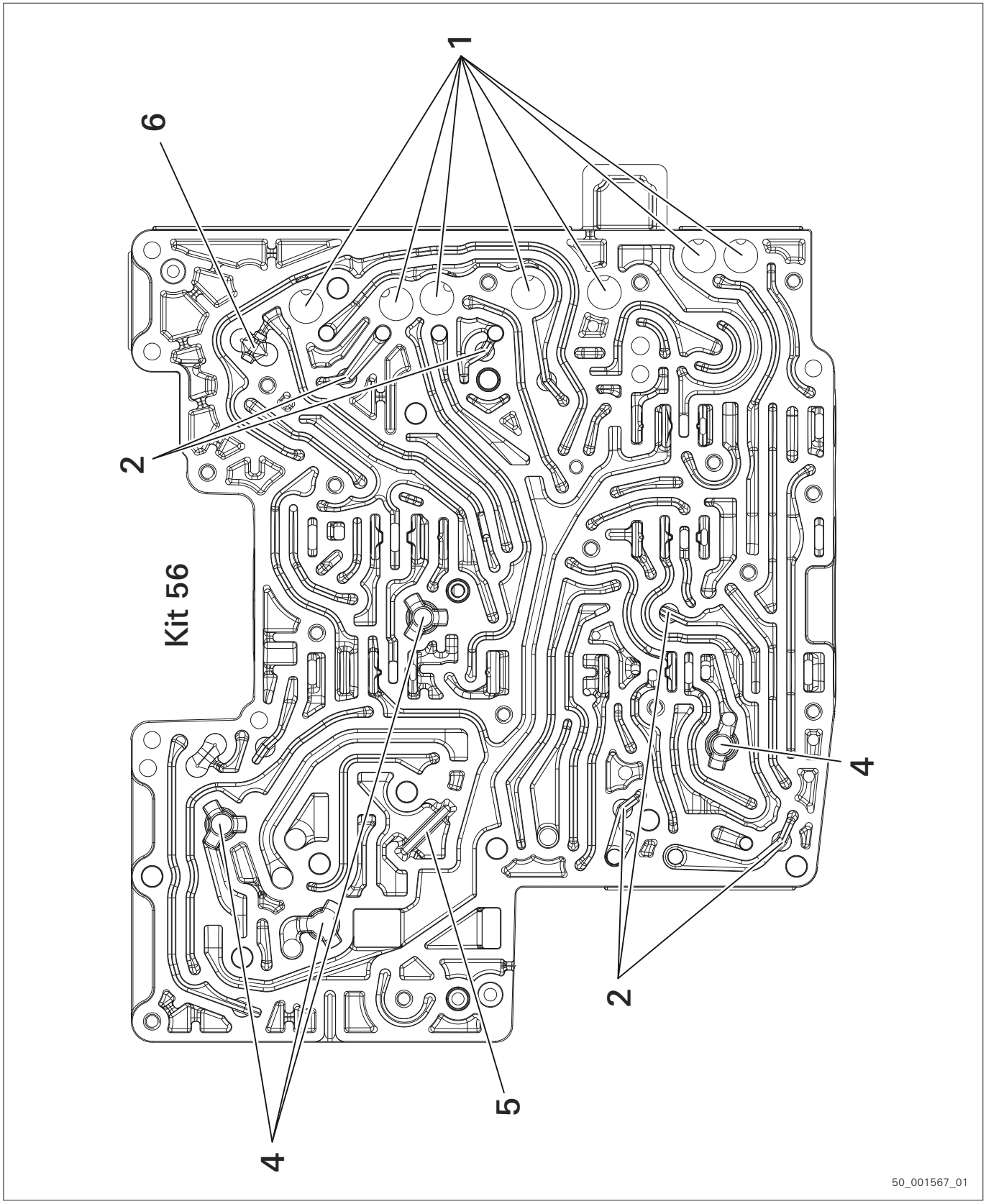

Fig. 32 1068.298.605

ZF Friedrichshafen AG
ZF Aftermarket
Metzer Straße 160
66117 Saarbrücken

Technical support
Telefon/Phone: +49 681 920-0
www.zf.com/contact

© ZF Friedrichshafen AG

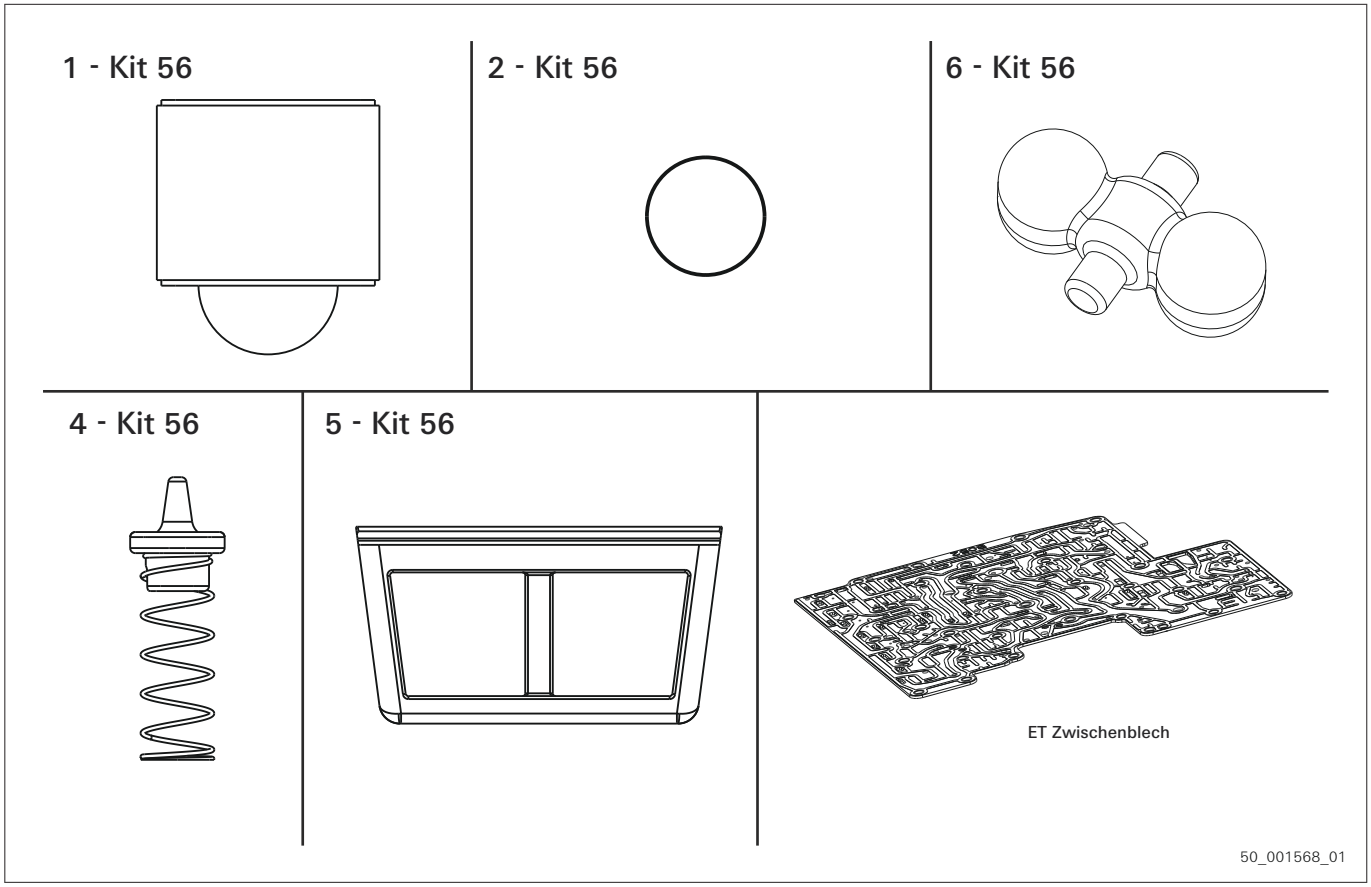

Fig. 33 1068.298.605 | 1068.298.606

ZF Friedrichshafen AG
ZF Aftermarket
Metzer Straße 160
66117 Saarbrücken

Technical support
Telefon/Phone: +49 681 920-0
www.zf.com/contact

© ZF Friedrichshafen AG

5.13 1068.298.606 - valve housing

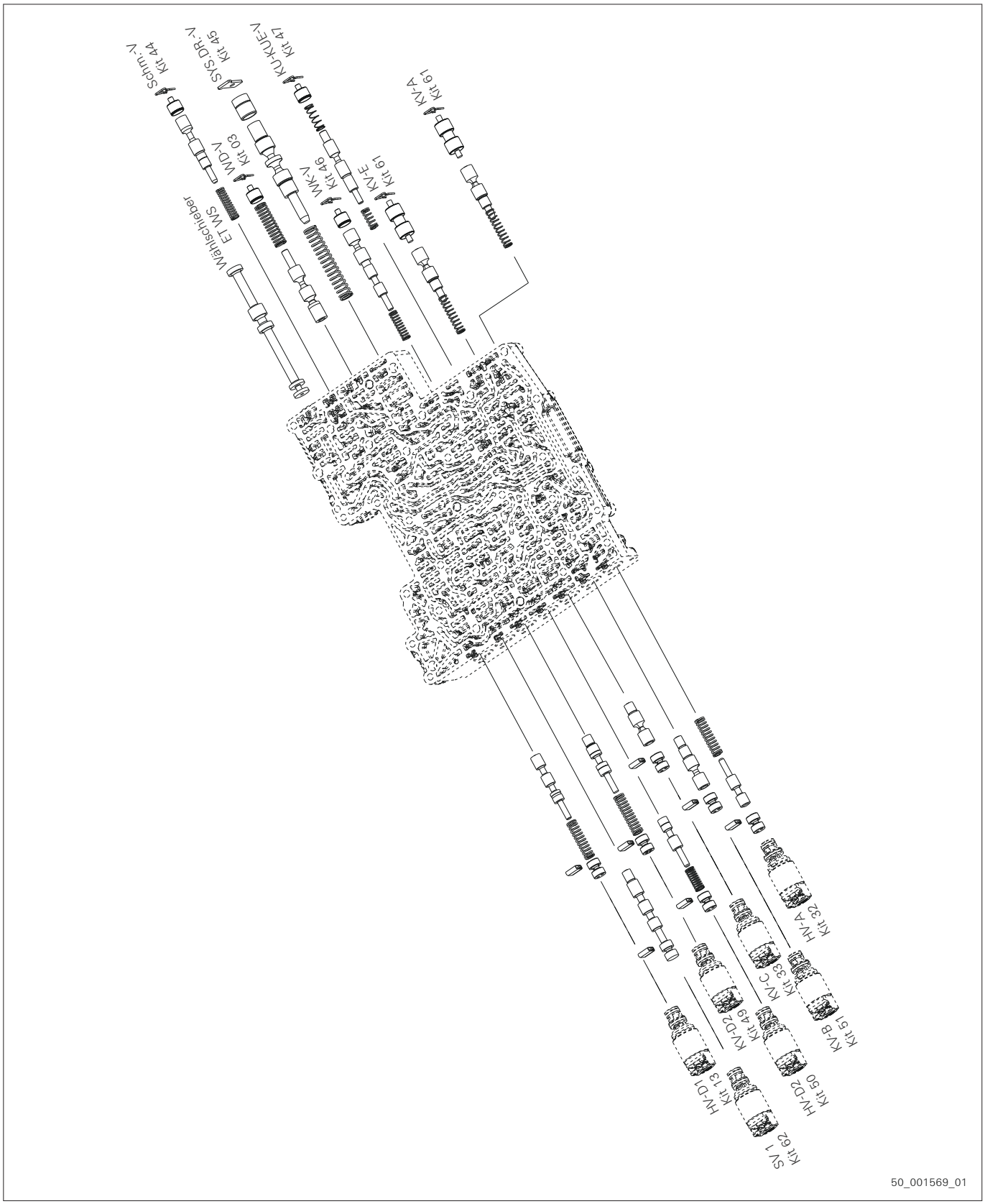

Fig. 34 1068.298.606

5.14 1068.298.606 - valve plate

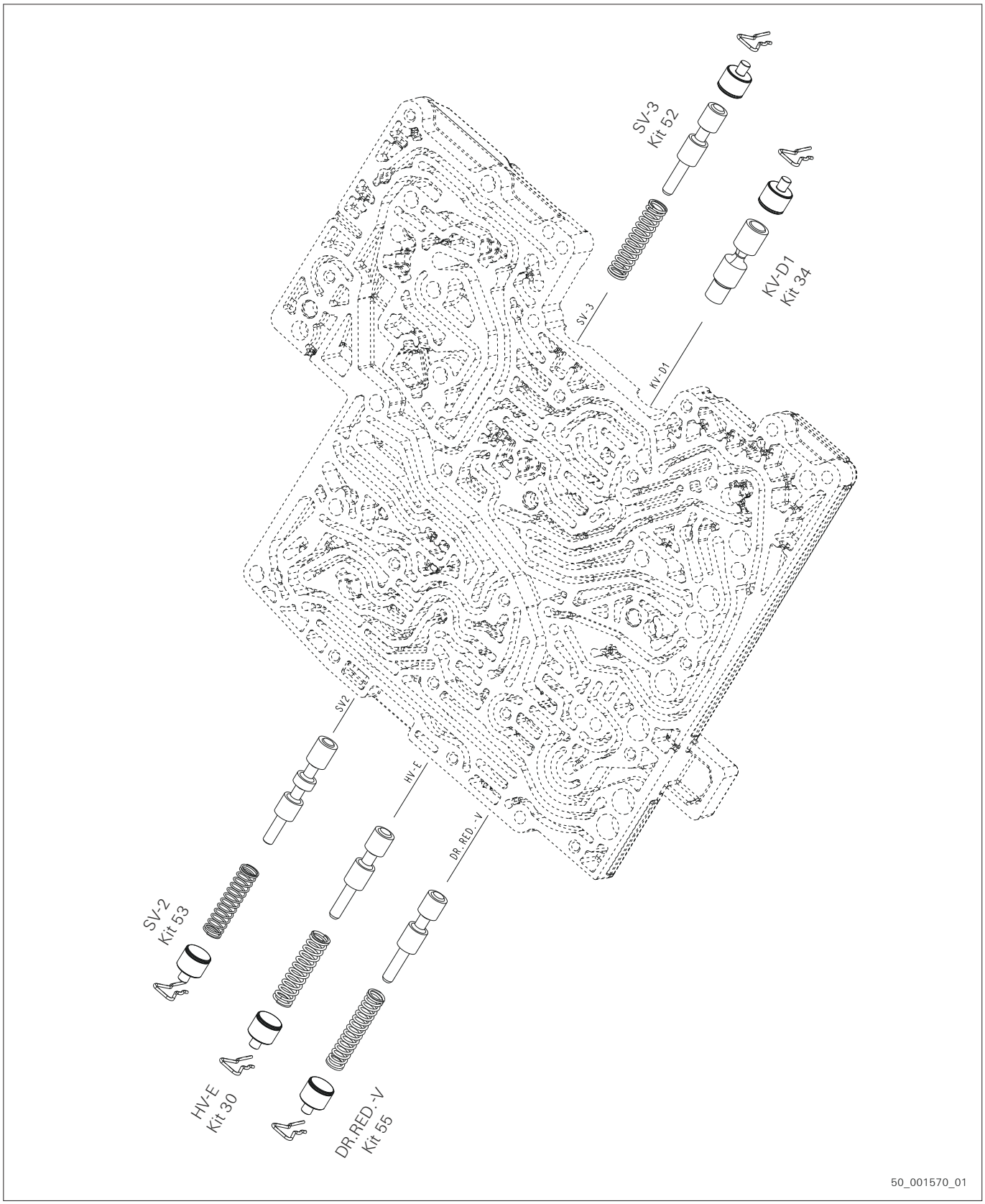

Fig. 35 1068.298.606

© ZF Friedrichshafen AG

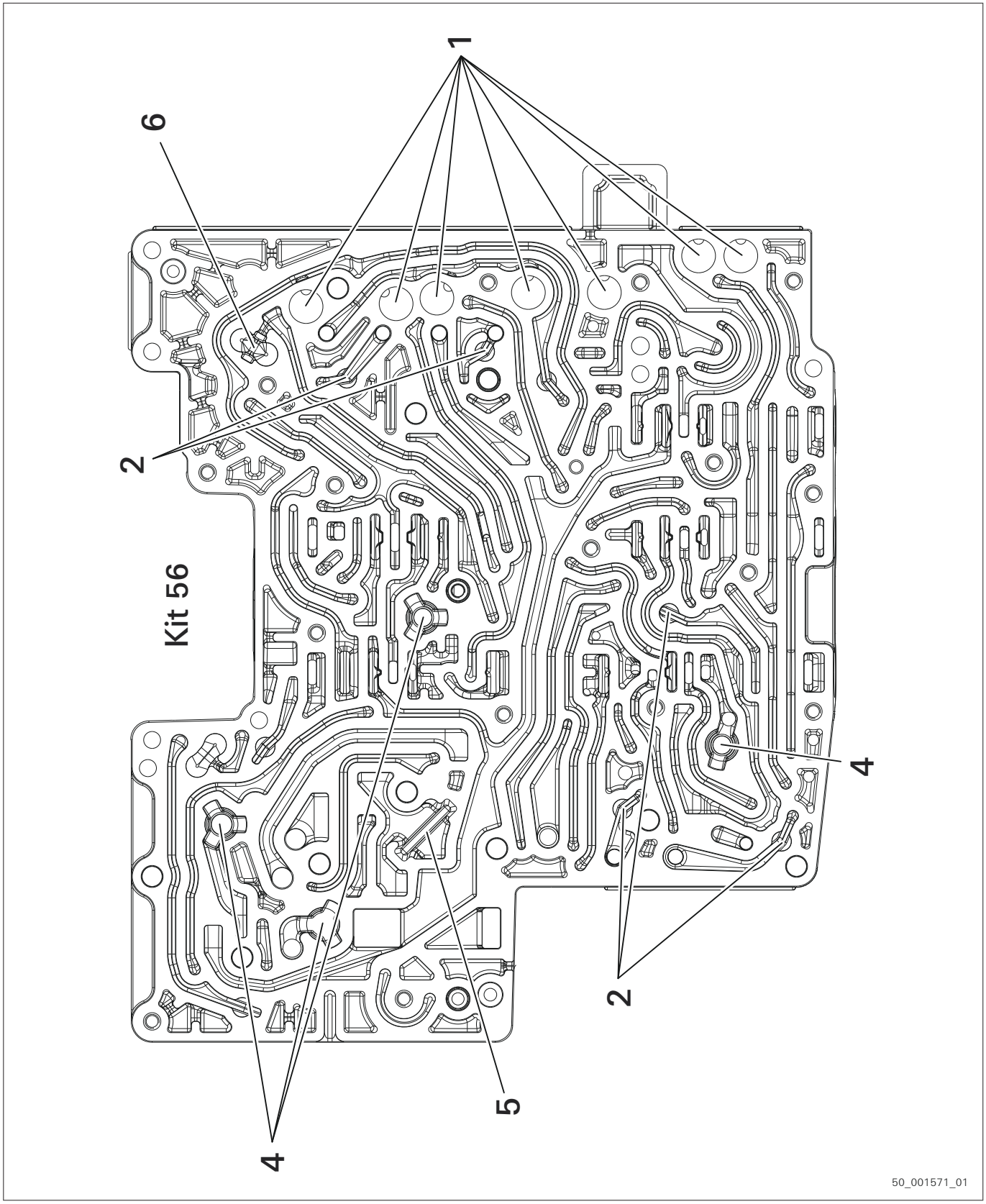

Fig. 36 1068.298.606

ZF Friedrichshafen AG
ZF Aftermarket
Metzer Straße 160
66117 Saarbrücken

Technical support
Telefon/Phone: +49 681 920-0
www.zf.com/contact

© ZF Friedrichshafen AG

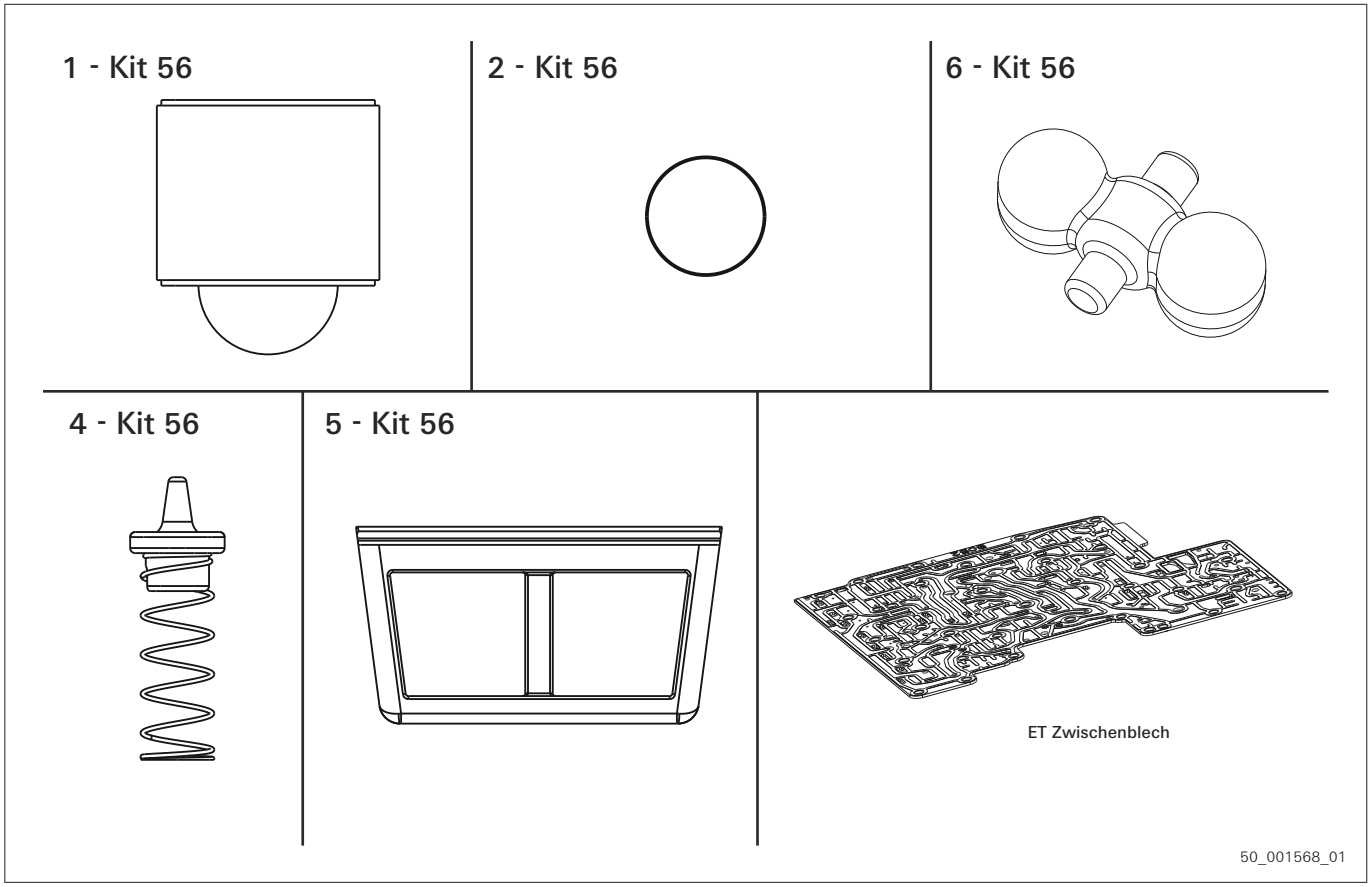

Fig. 37 1068.298.605 | 1068.298.606

ZF Friedrichshafen AG
ZF Aftermarket
Metzer Straße 160
66117 Saarbrücken

Technical support
Telefon/Phone: +49 681 920-0
www.zf.com/contact

© ZF Friedrichshafen AG

5.15 1068.298.607 - valve housing

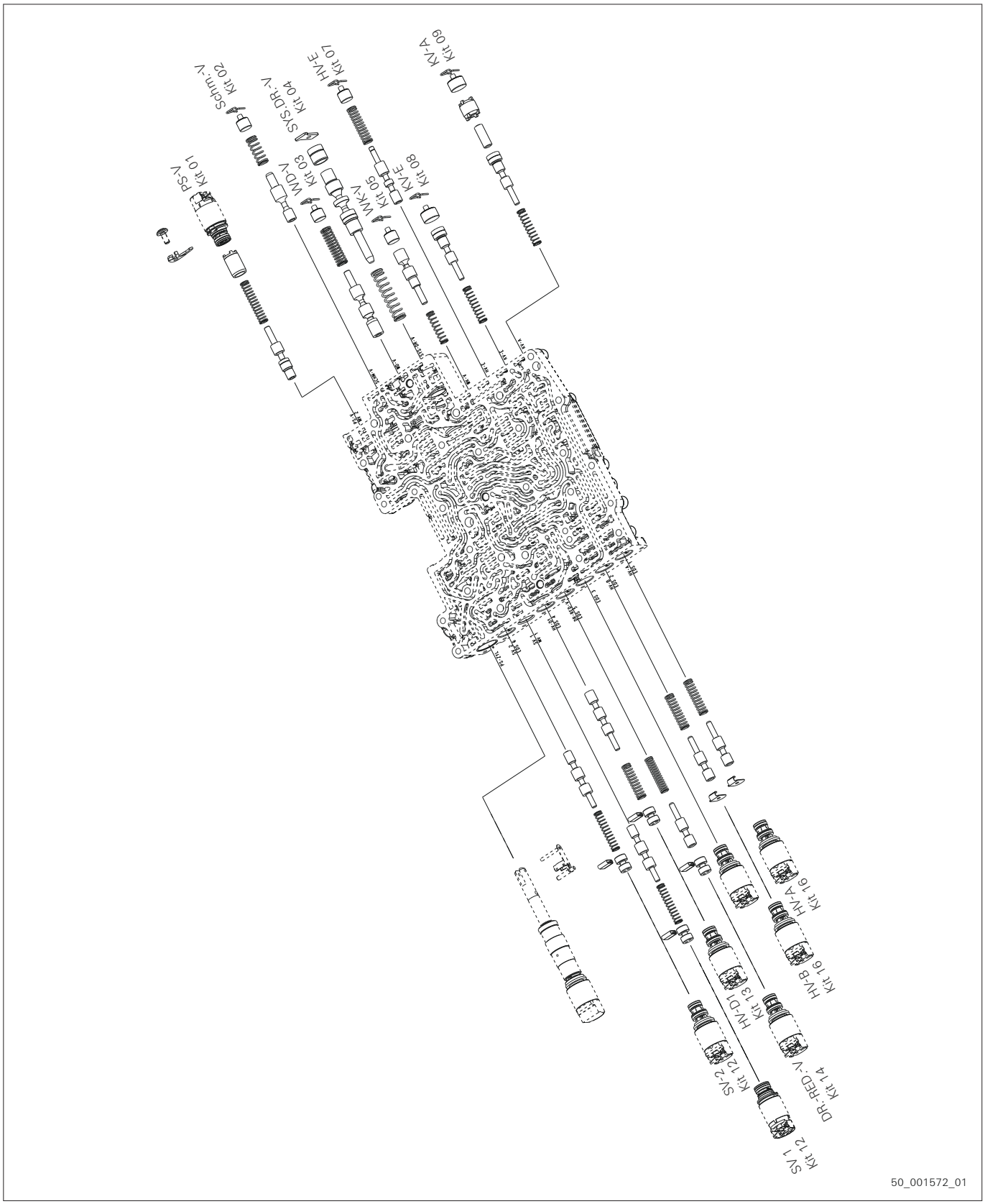

Fig. 38 1068.298.607

© ZF Friedrichshafen AG

5.16 1068.298.607 - valve plate

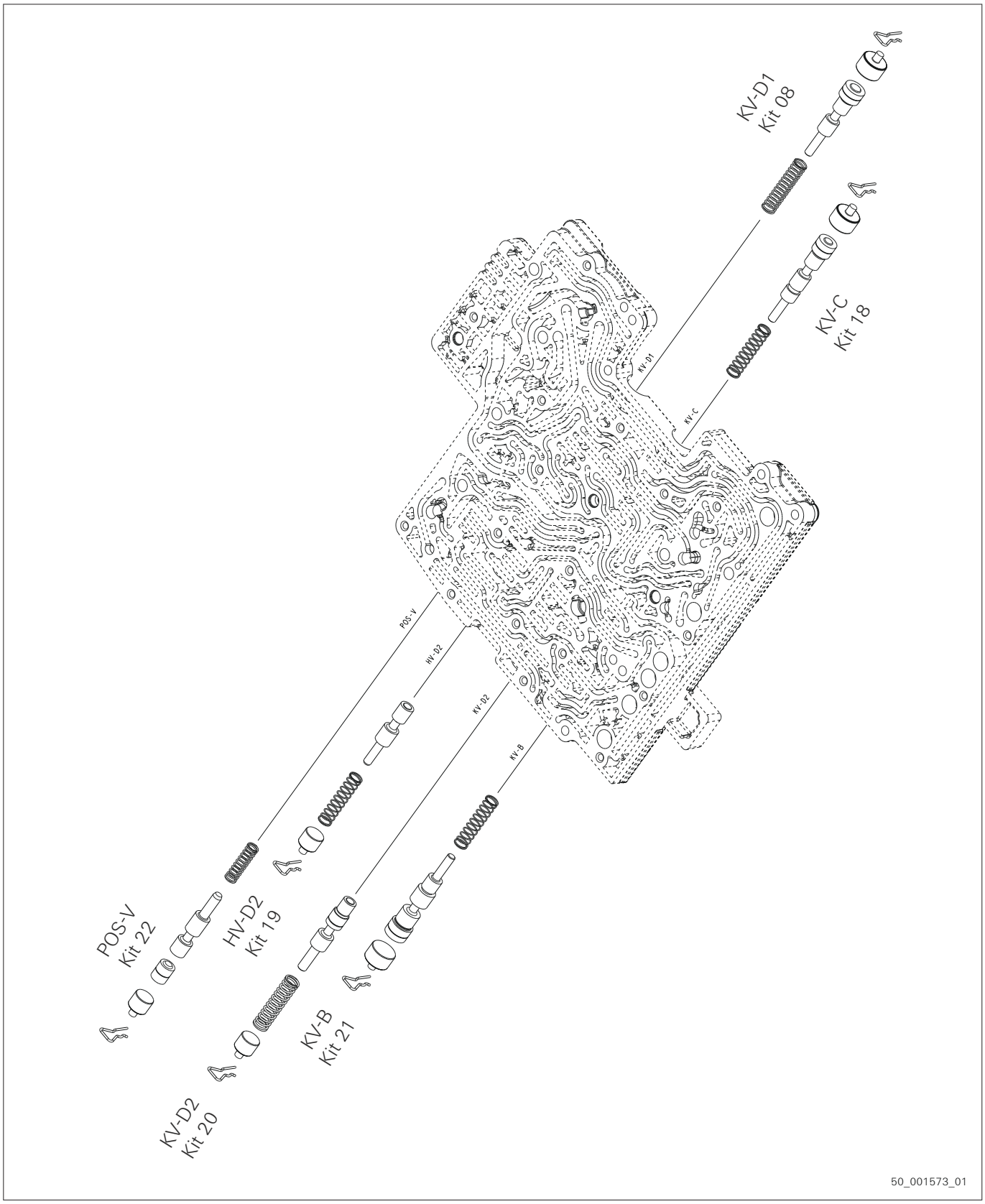

Fig. 39 1068.298.607

© ZF Friedrichshafen AG

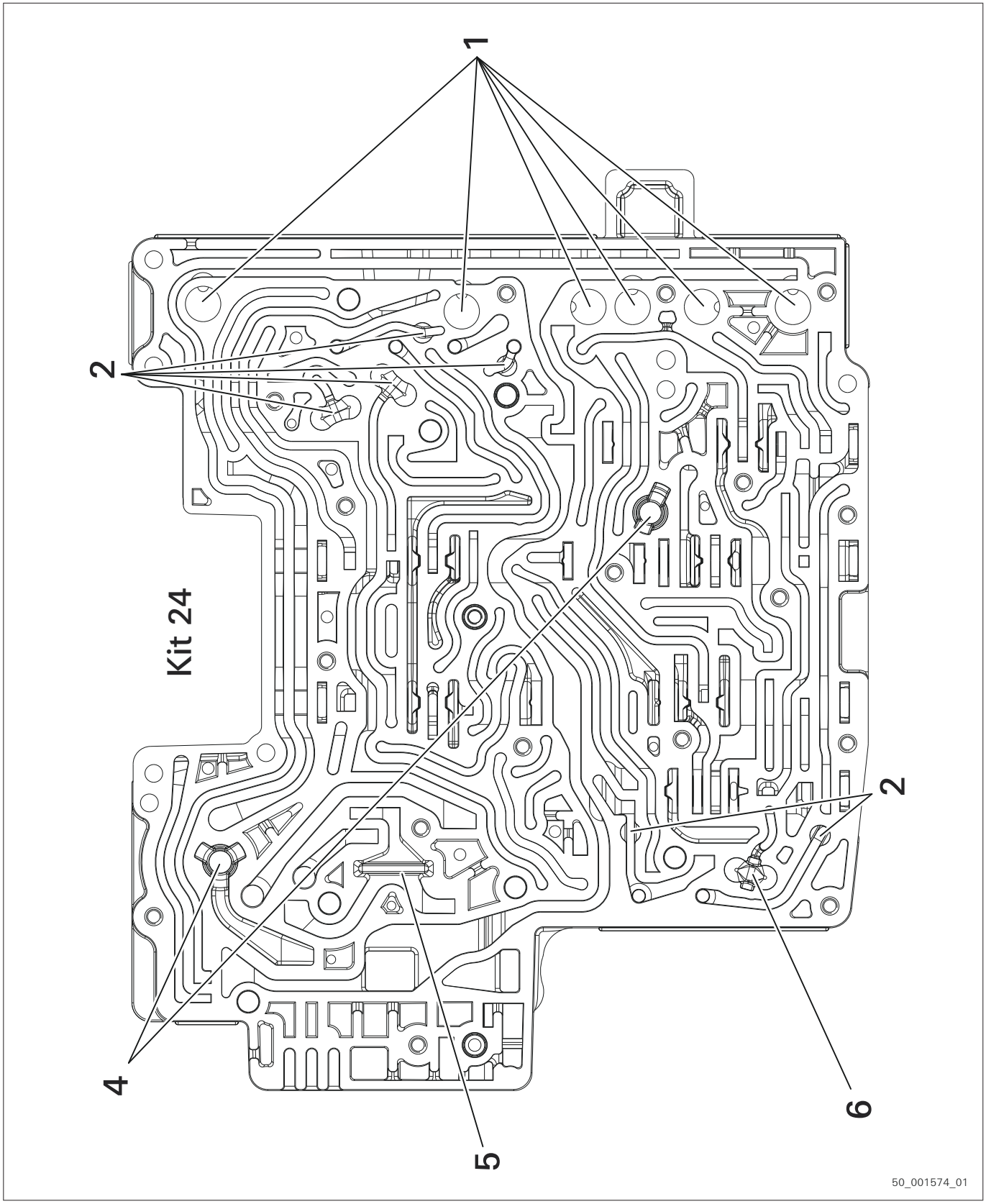

Fig. 40 1068.298.607

ZF Friedrichshafen AG
ZF Aftermarket
Metzer Straße 160
66117 Saarbrücken

Technical support
Telefon/Phone: +49 681 920-0
www.zf.com/contact

© ZF Friedrichshafen AG

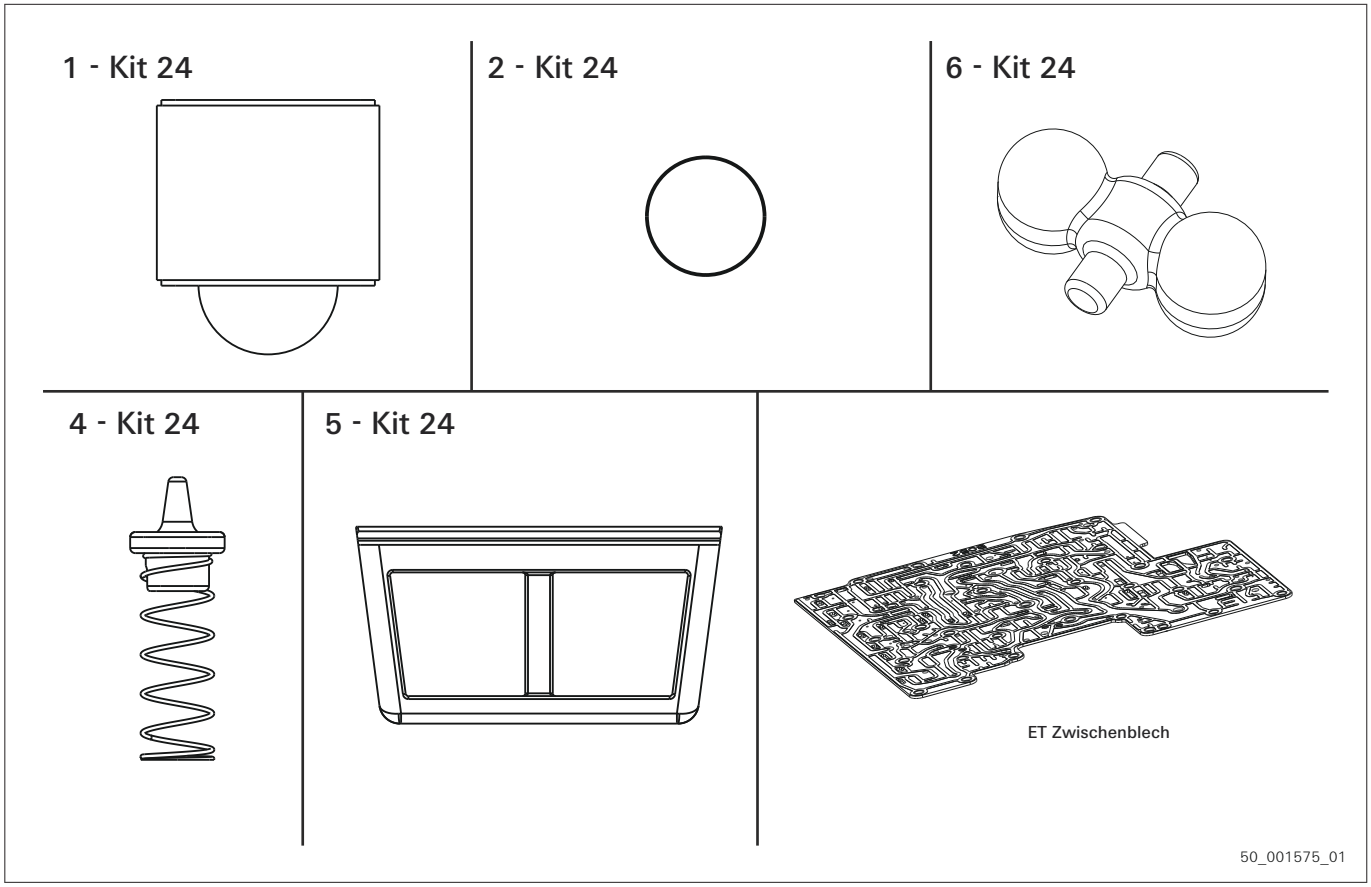

Fig. 41 1068.298.607 | 1068.298.608 | 1068.298.609

ZF Friedrichshafen AG
ZF Aftermarket
Metzer Straße 160
66117 Saarbrücken

Technical support
Telefon/Phone: +49 681 920-0
www.zf.com/contact

© ZF Friedrichshafen AG

5.17 1068.298.608 - valve housing

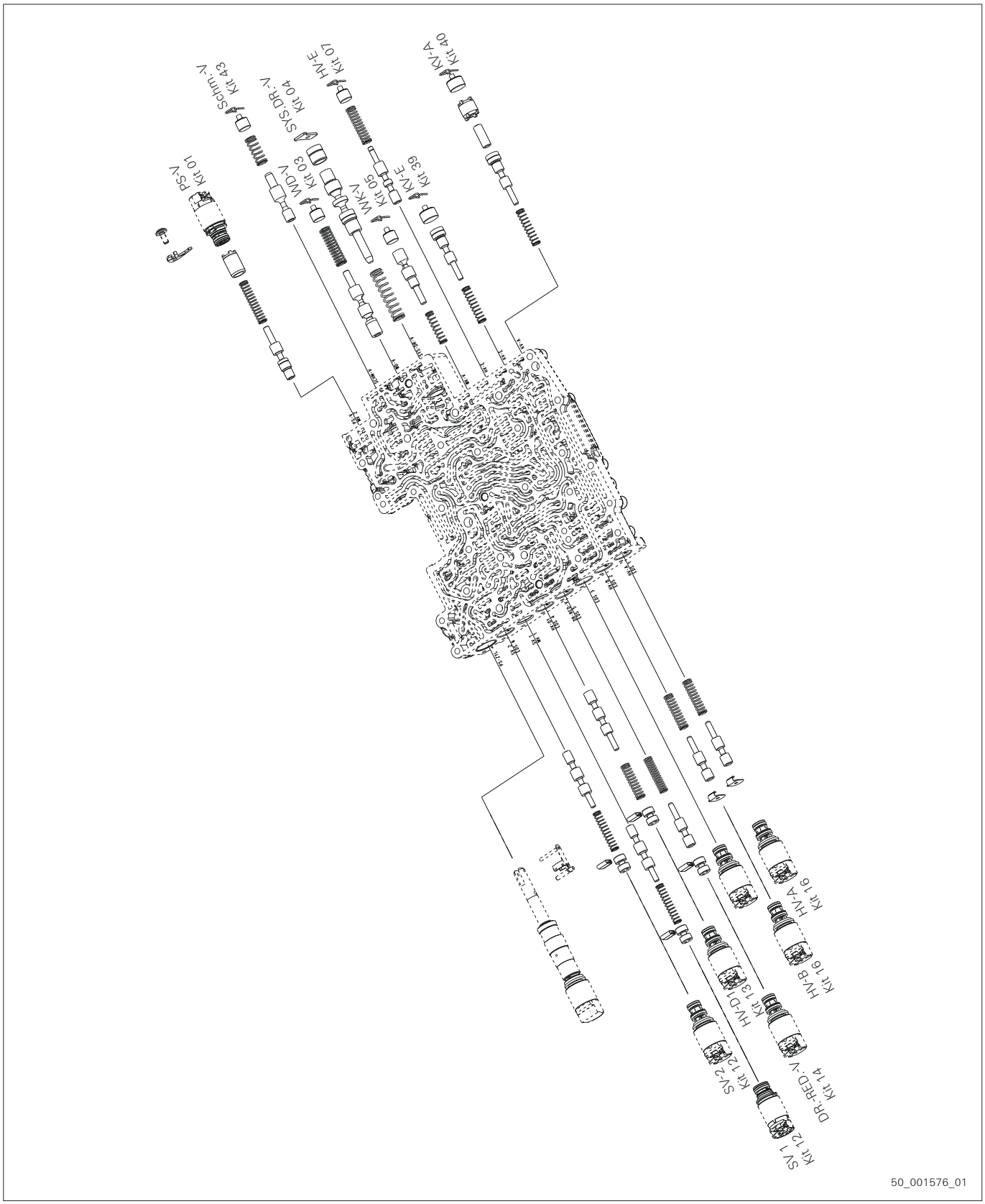

Fig. 42 1068.298.608

5.18 1068.298.608 - valve plate

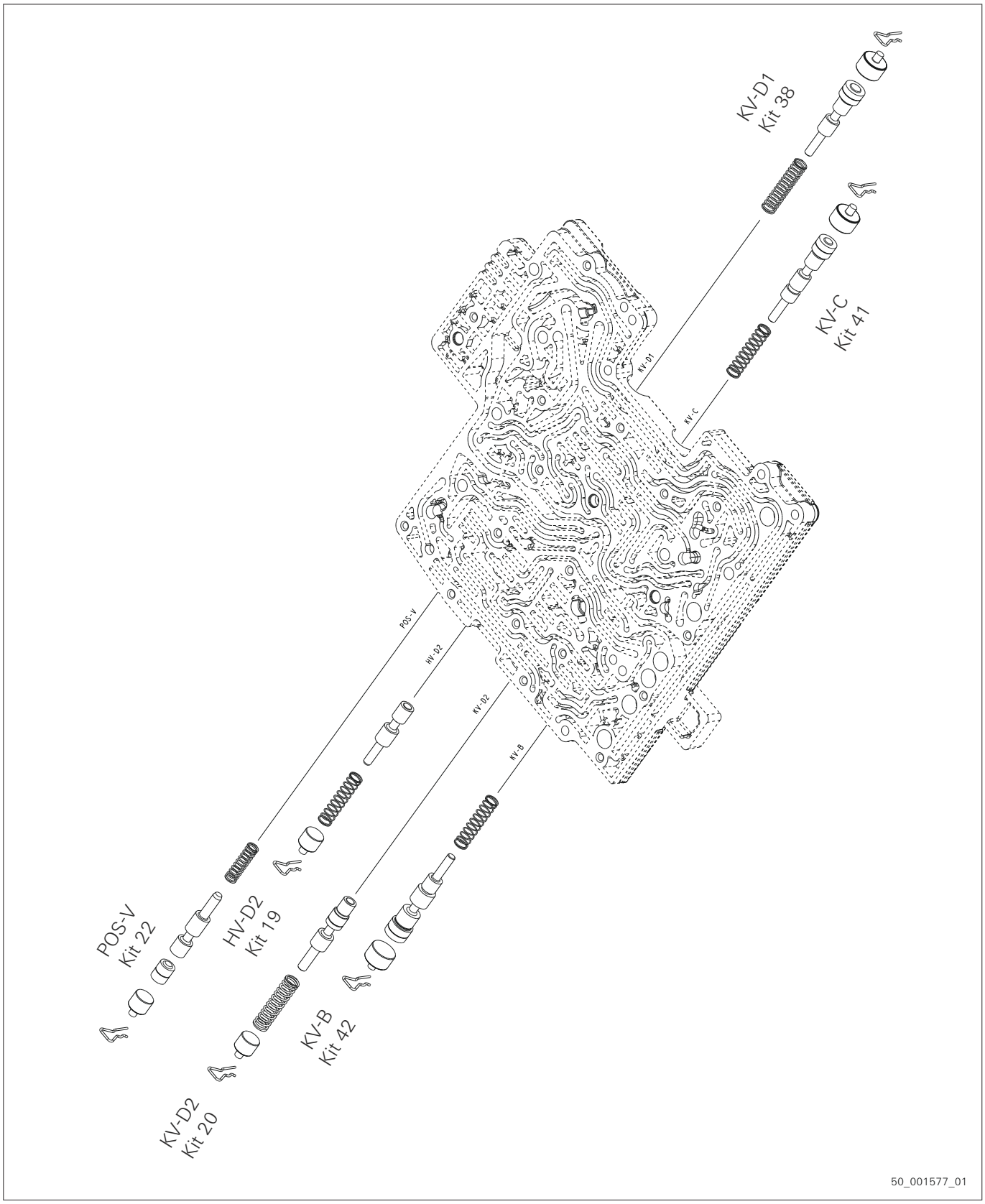

Fig. 43 1068.298.608

© ZF Friedrichshafen AG

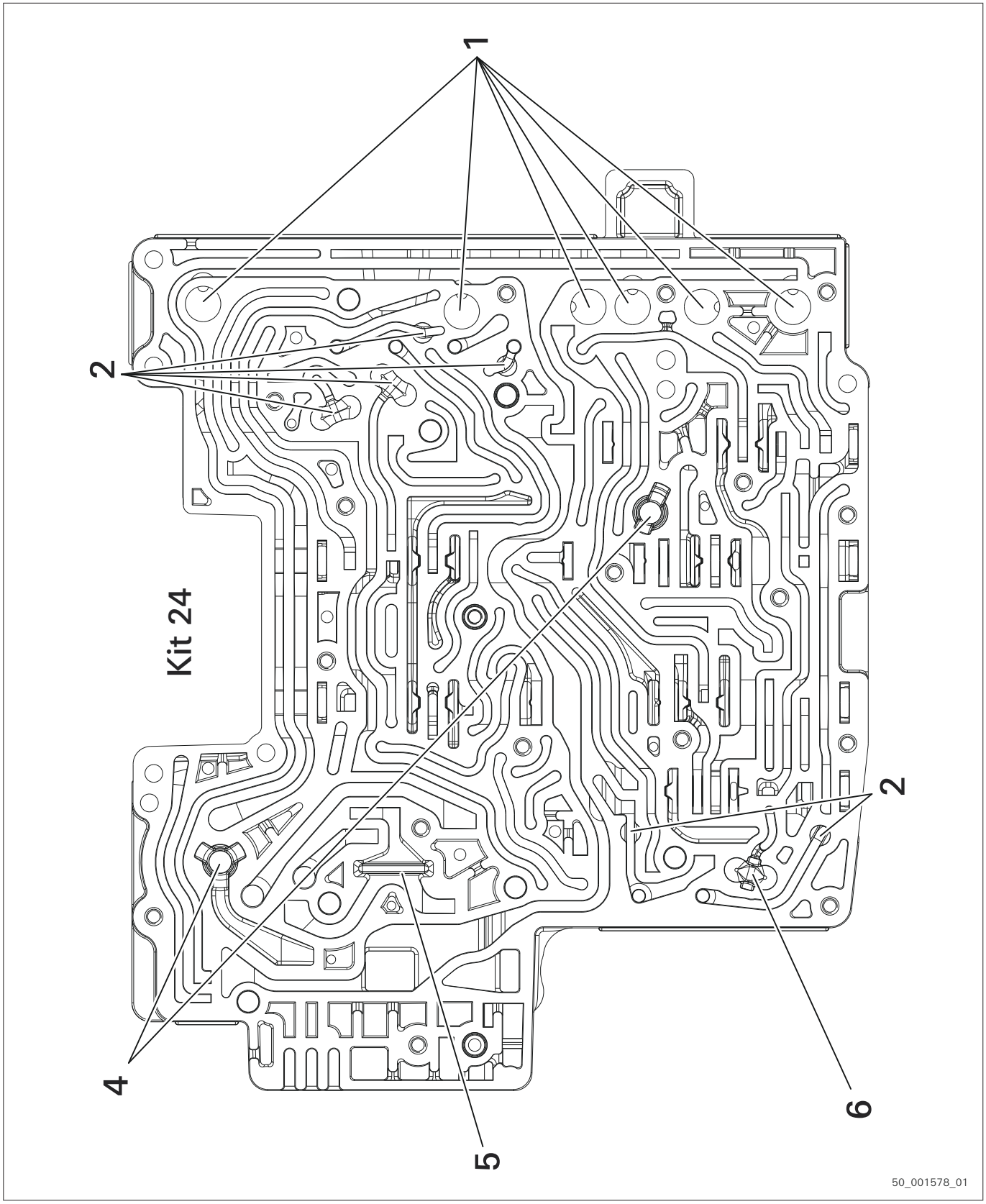

Fig. 44 1068.298.608

© ZF Friedrichshafen AG

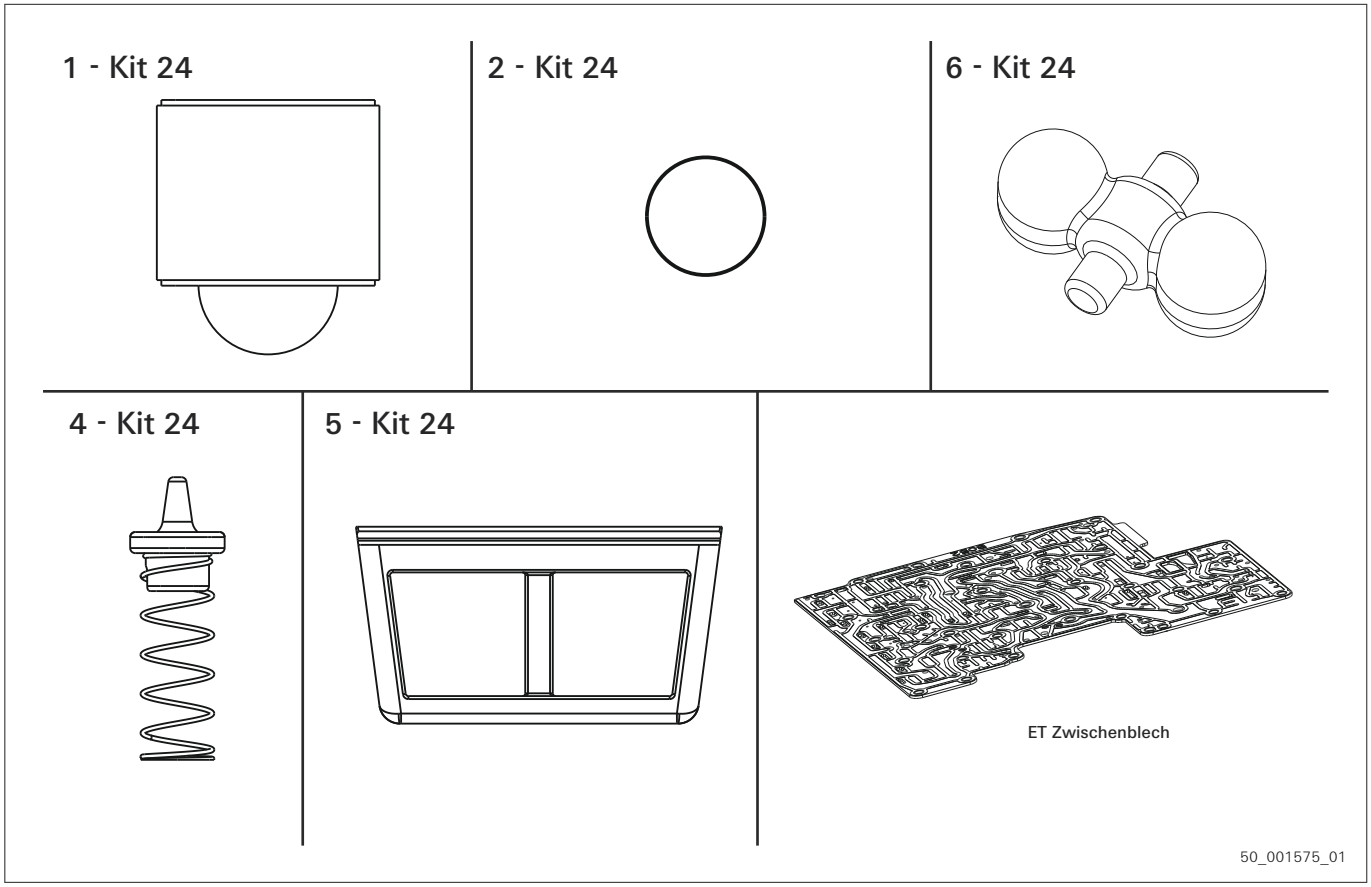

Fig. 45 1068.298.607 | 1068.298.608 | 1068.298.609

ZF Friedrichshafen AG
ZF Aftermarket
Metzer Straße 160
66117 Saarbrücken

Technical support
Telefon/Phone: +49 681 920-0
www.zf.com/contact

© ZF Friedrichshafen AG

5.19 1068.298.609 - valve housing

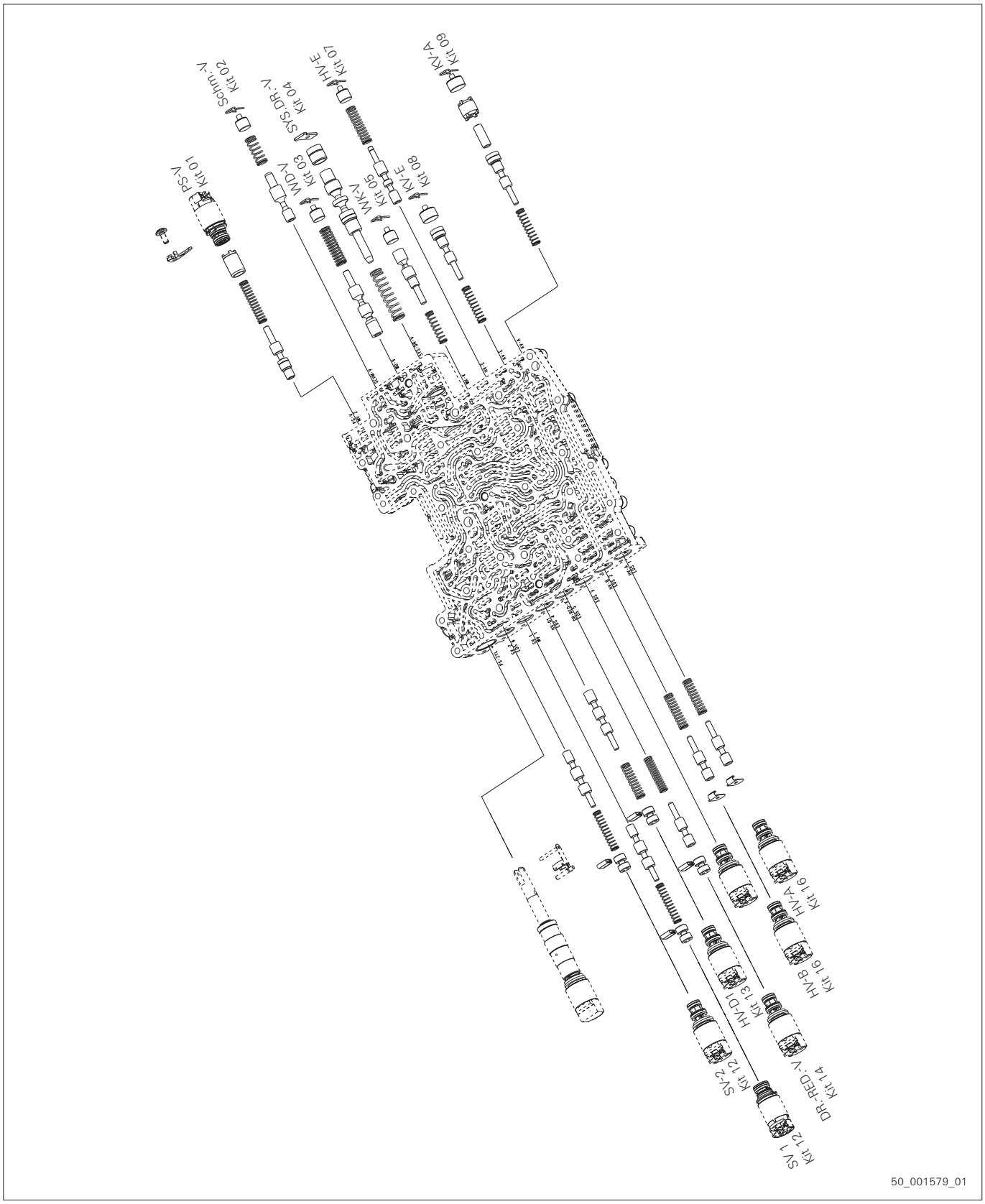

Fig. 46 1068.298.609

© ZF Friedrichshafen AG

5.20 1068.298.609 - valve plate

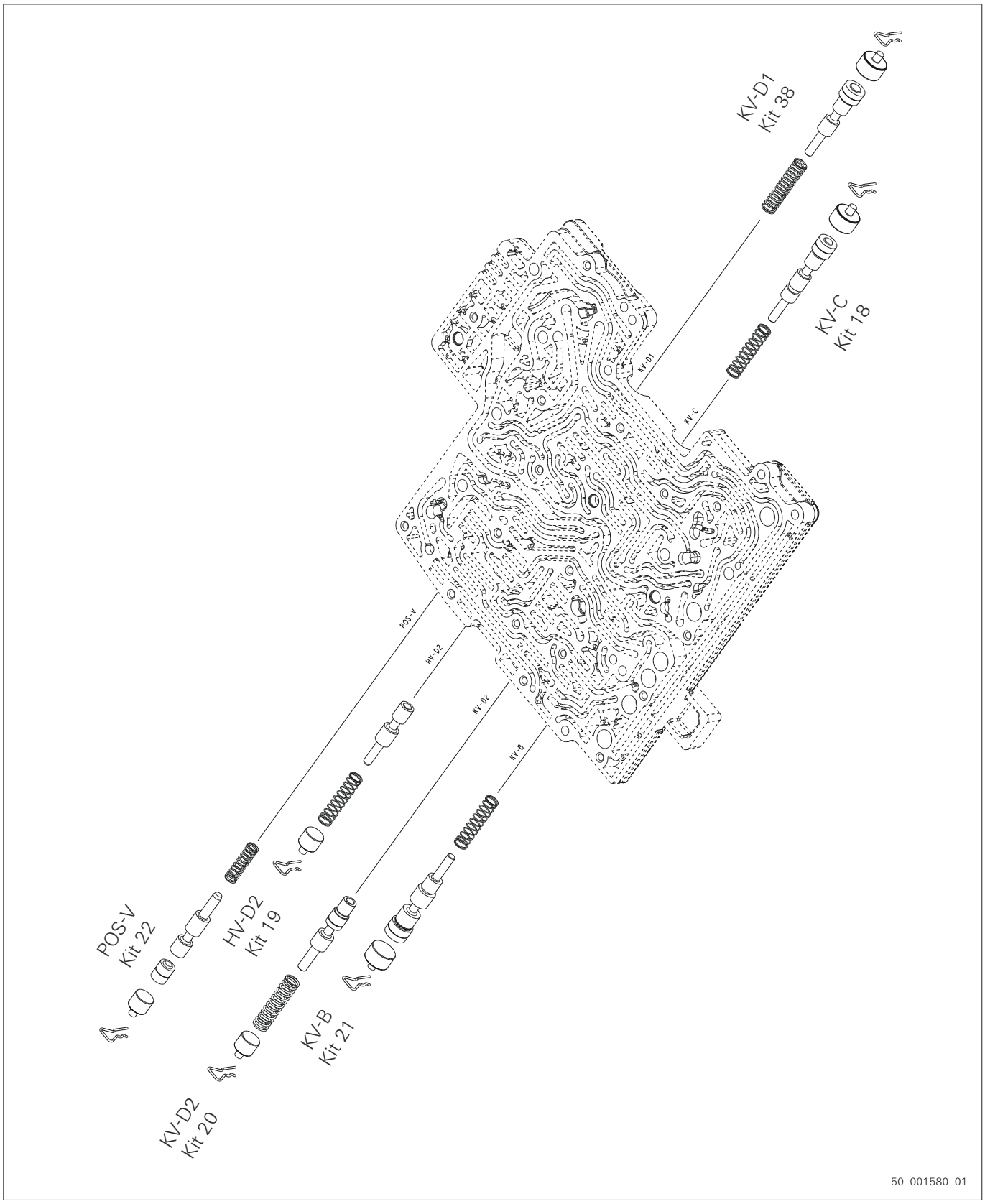

Fig. 47 1068.298.609

© ZF Friedrichshafen AG

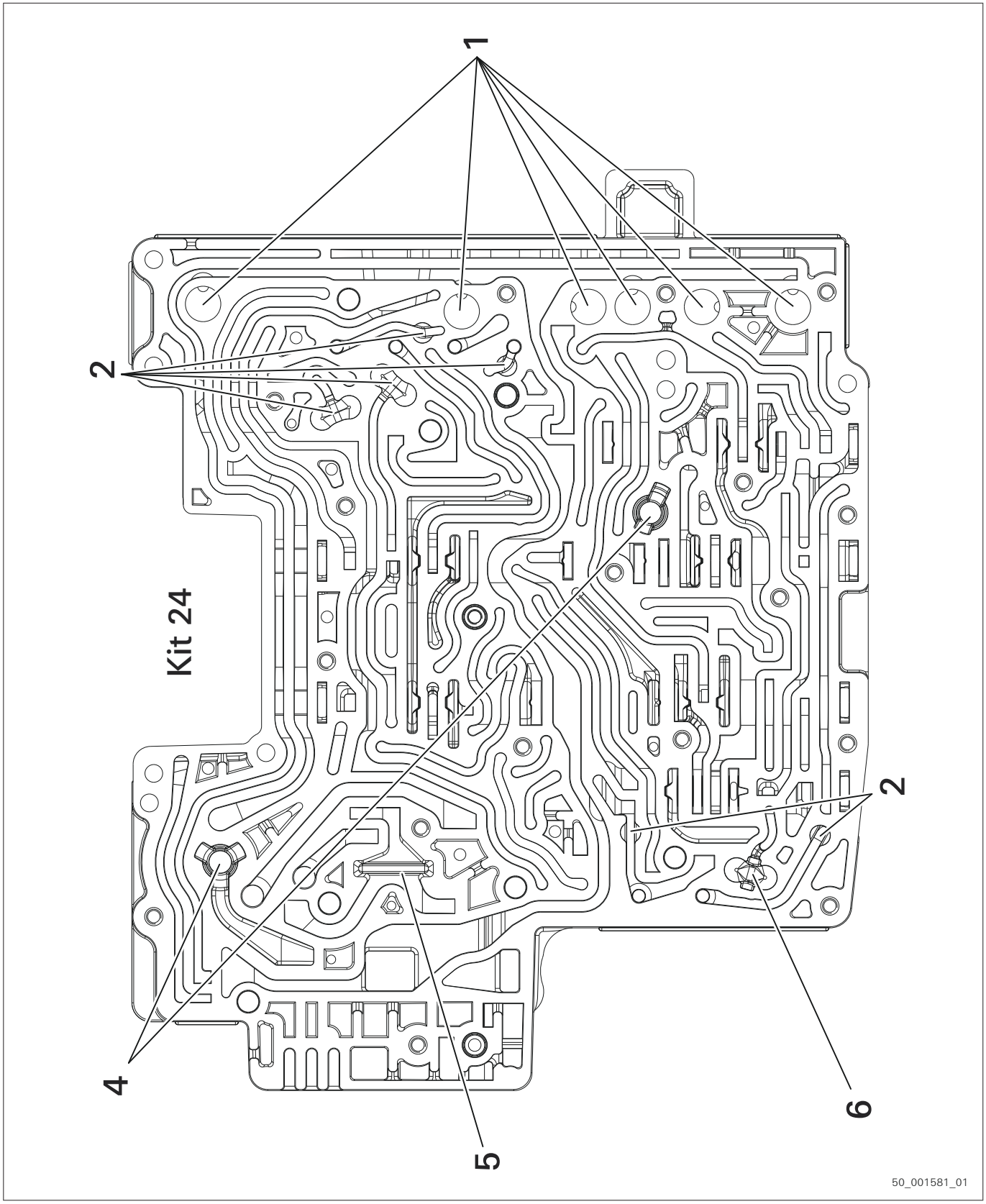

Fig. 48 1068.298.609

© ZF Friedrichshafen AG

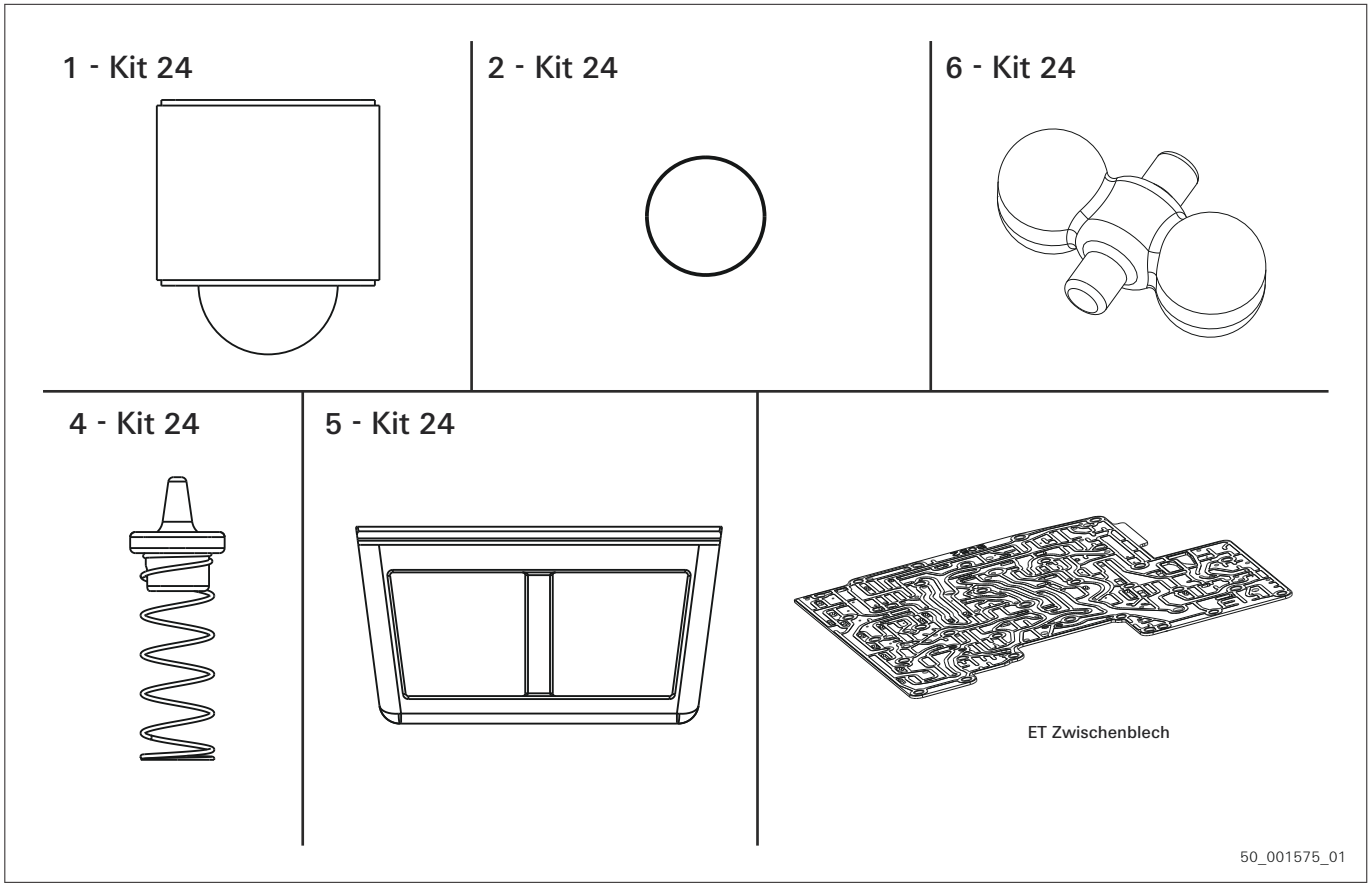

Fig. 49 1068.298.607 | 1068.298.608 | 1068.298.609

ZF Friedrichshafen AG
ZF Aftermarket
Metzer Straße 160
66117 Saarbrücken

Technical support
Telefon/Phone: +49 681 920-0
www.zf.com/contact

© ZF Friedrichshafen AG

5.21 1068.298.610 - valve housing

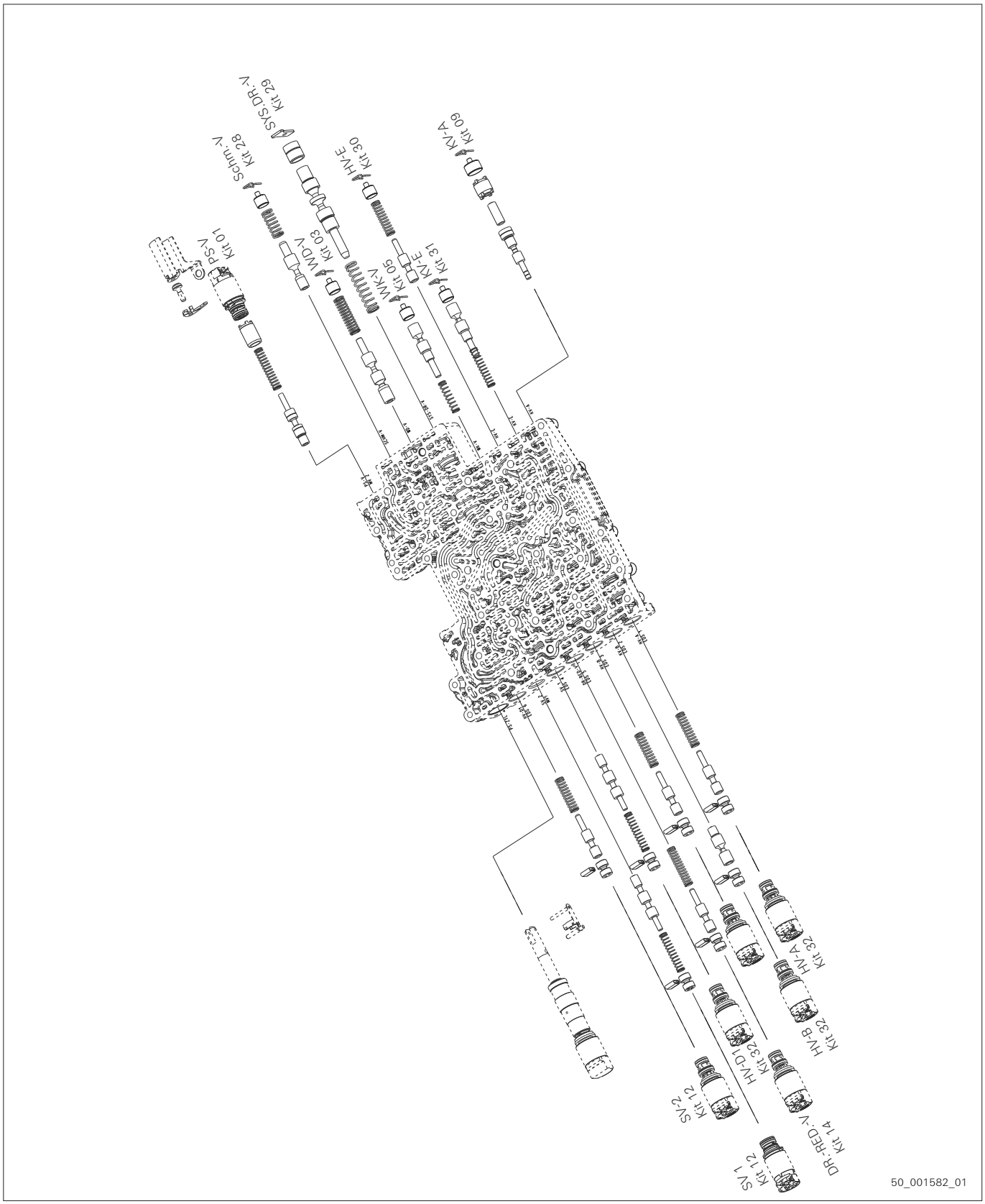

Fig. 50 1068.298.610

© ZF Friedrichshafen AG

5.22 1068.298.610 - valve plate

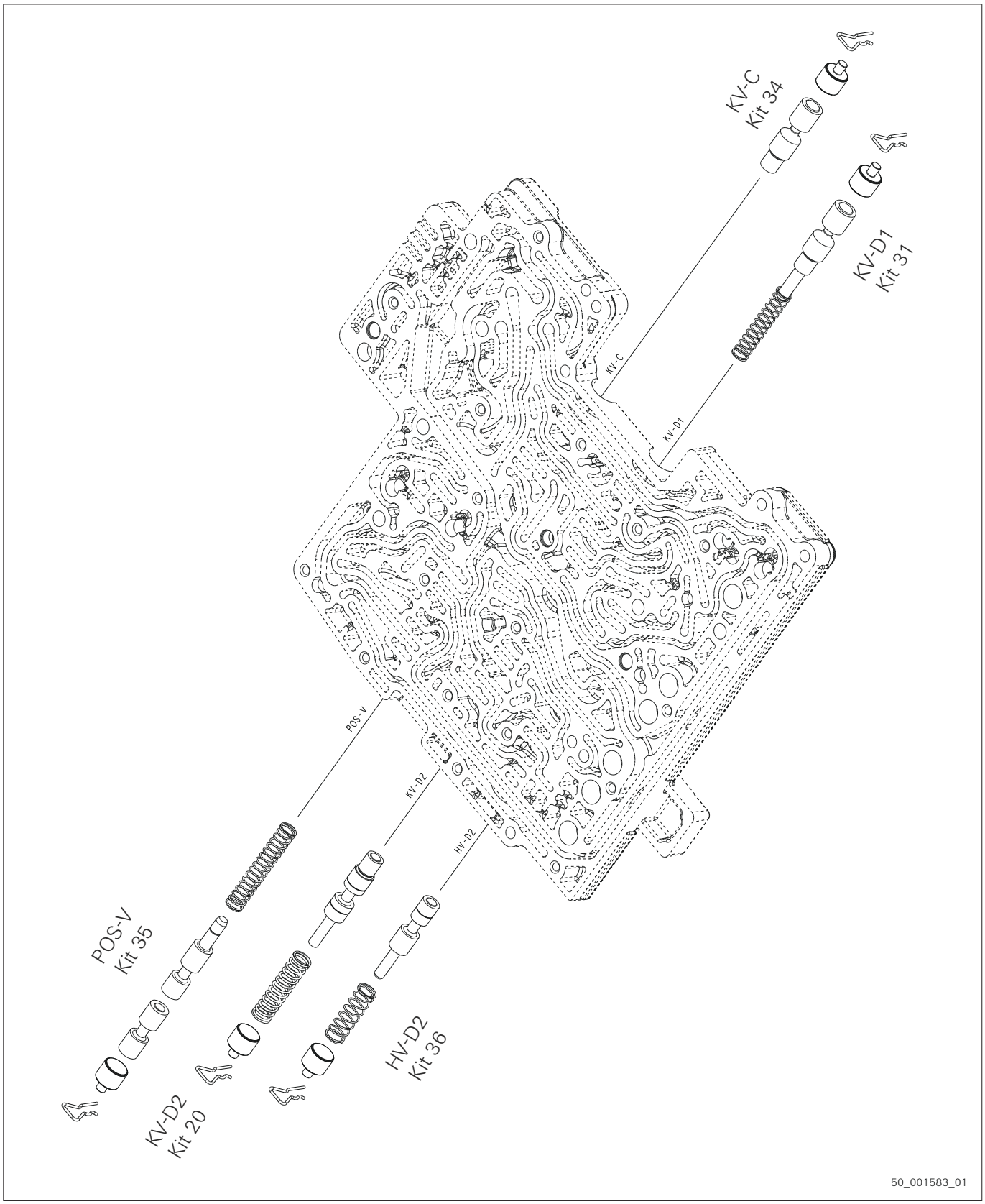

Fig. 51 1068.298.610

© ZF Friedrichshafen AG

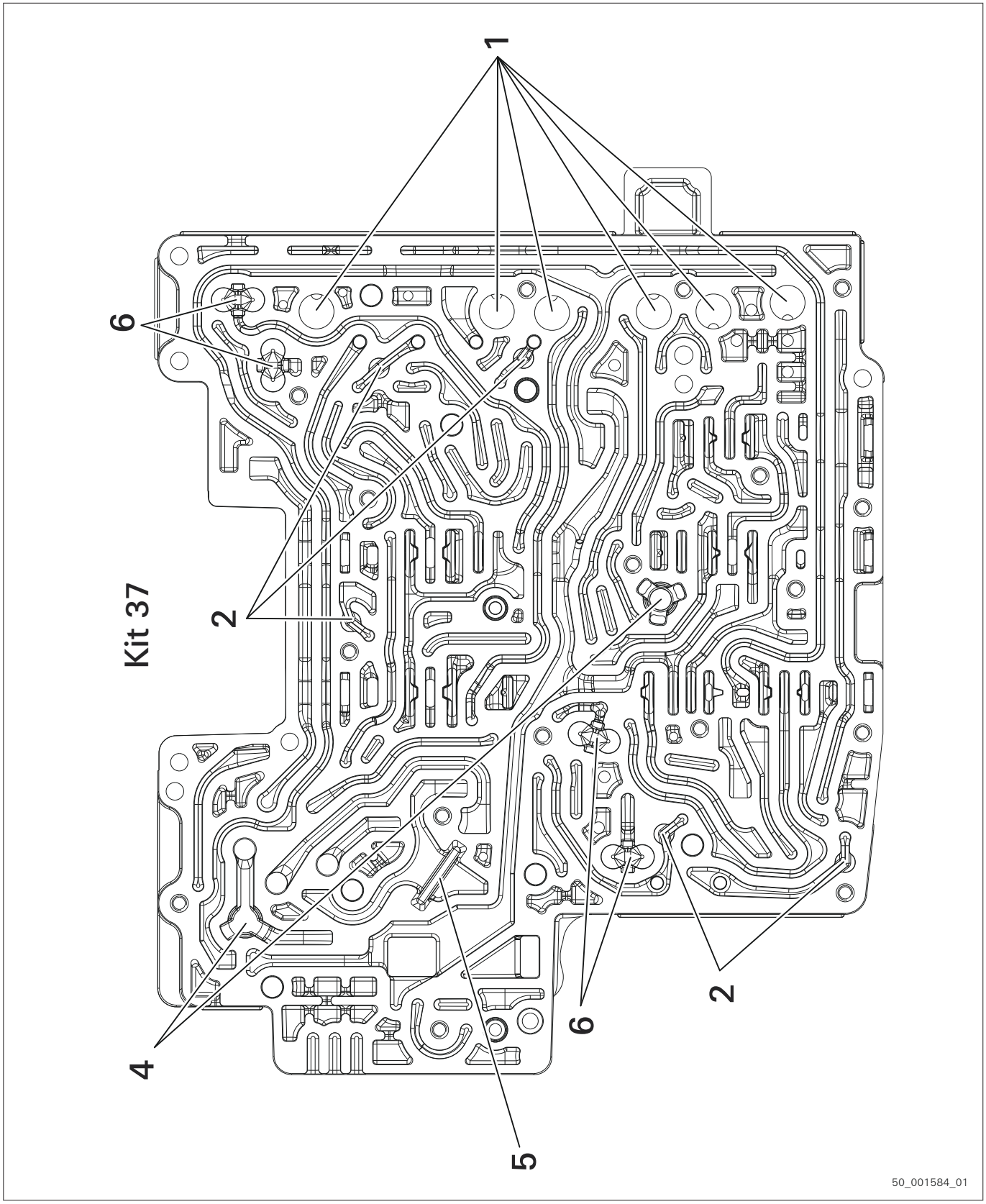

Fig. 52 1068.298.610

ZF Friedrichshafen AG
ZF Aftermarket
Metzer Straße 160
66117 Saarbrücken

Technical support
Telefon/Phone: +49 681 920-0
www.zf.com/contact

© ZF Friedrichshafen AG

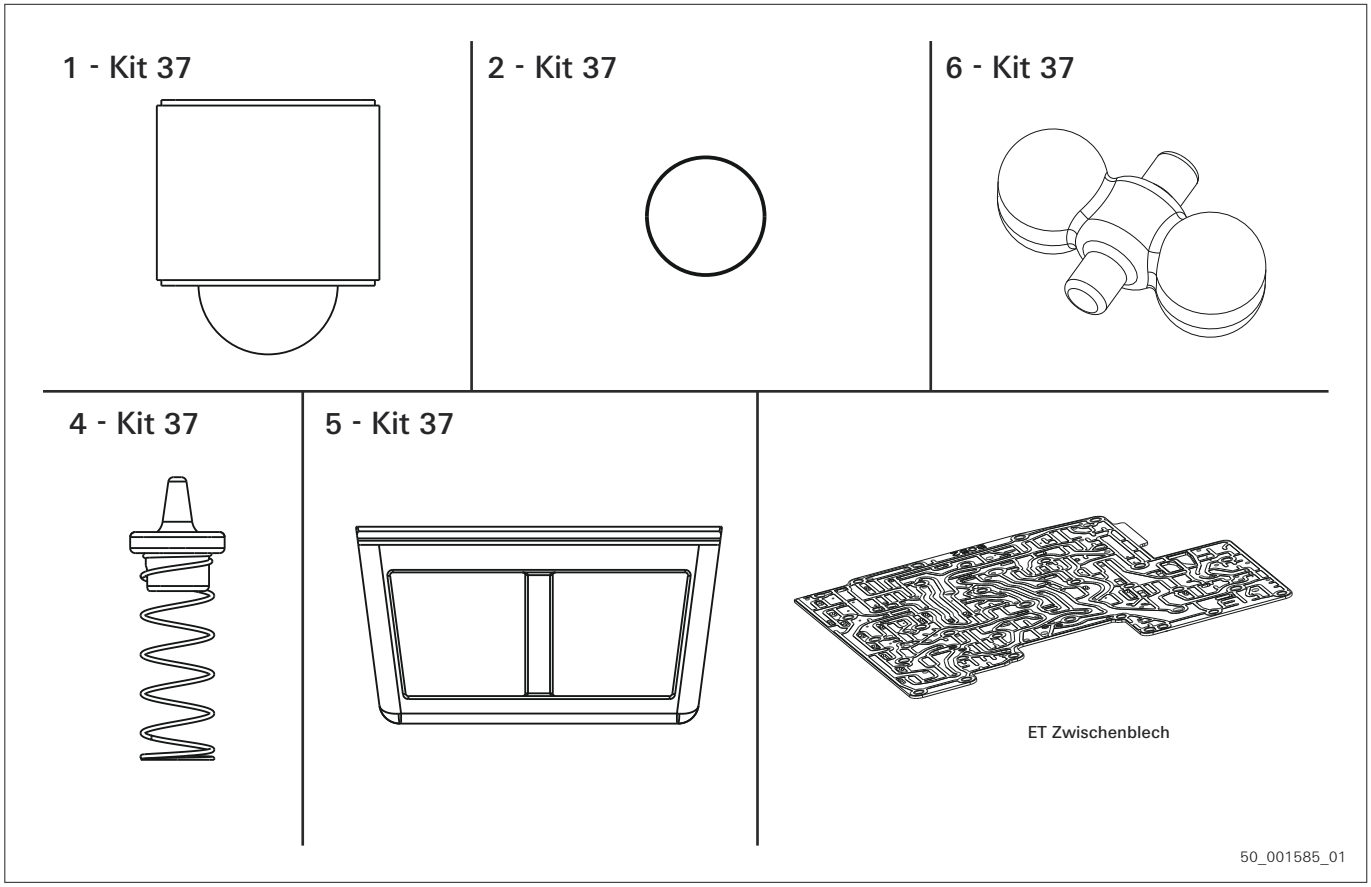

Fig. 53 1068.298.610

© ZF Friedrichshafen AG

5.23 1068.298.611 - valve housing

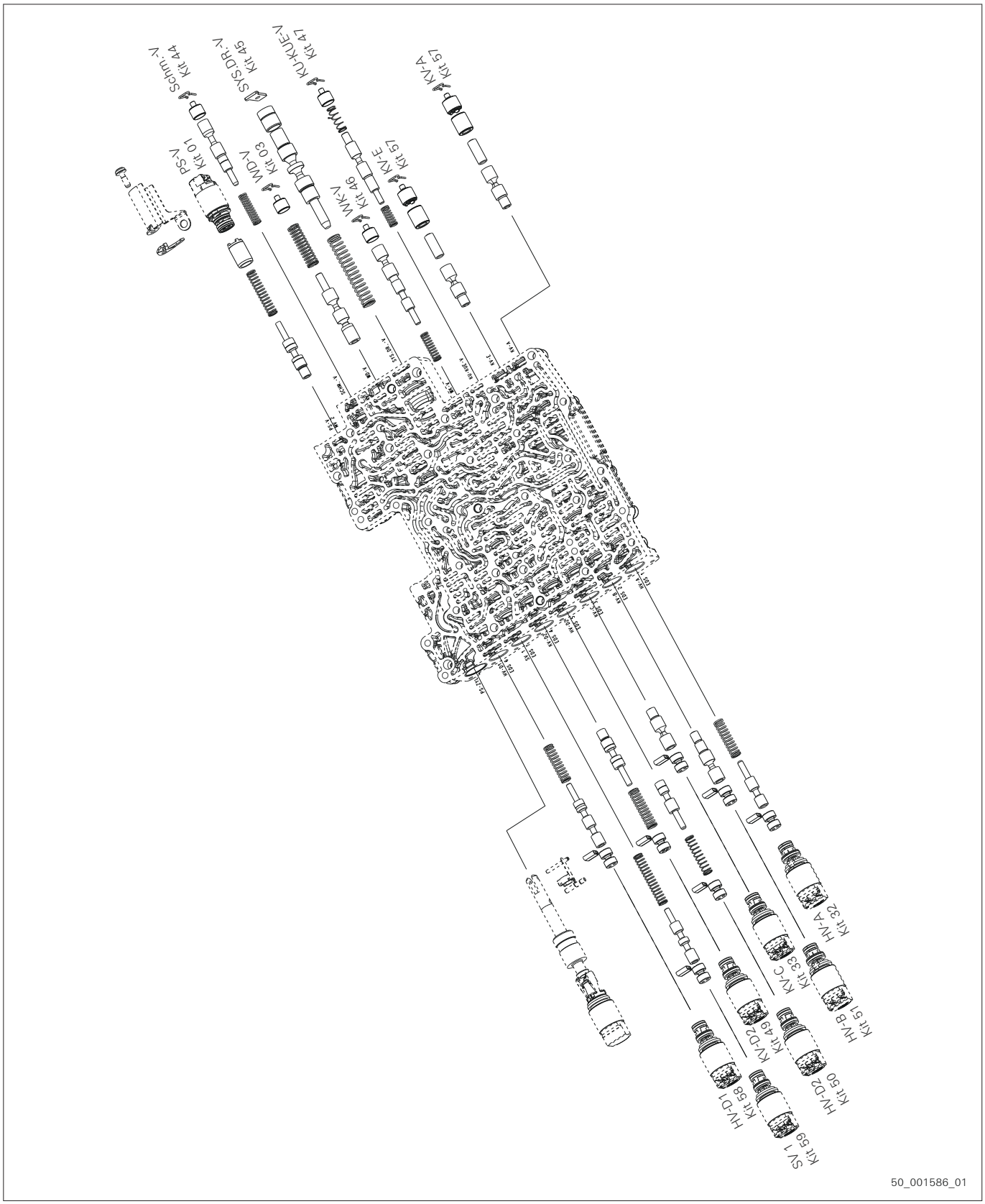

Fig. 54 1068.298.611

© ZF Friedrichshafen AG

5.24 1068.298.611 - valve plate

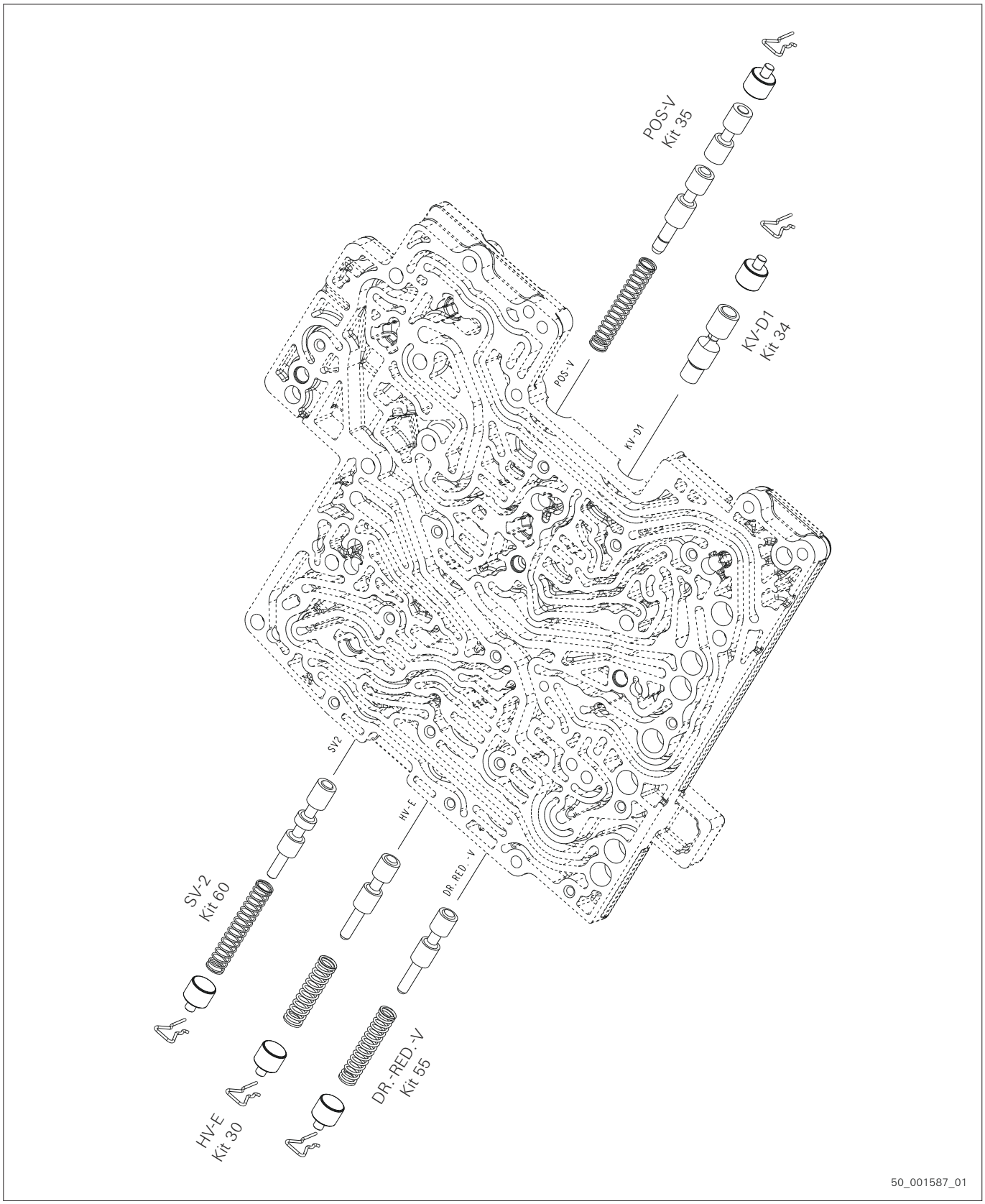

Fig. 55 1068.298.611

© ZF Friedrichshafen AG

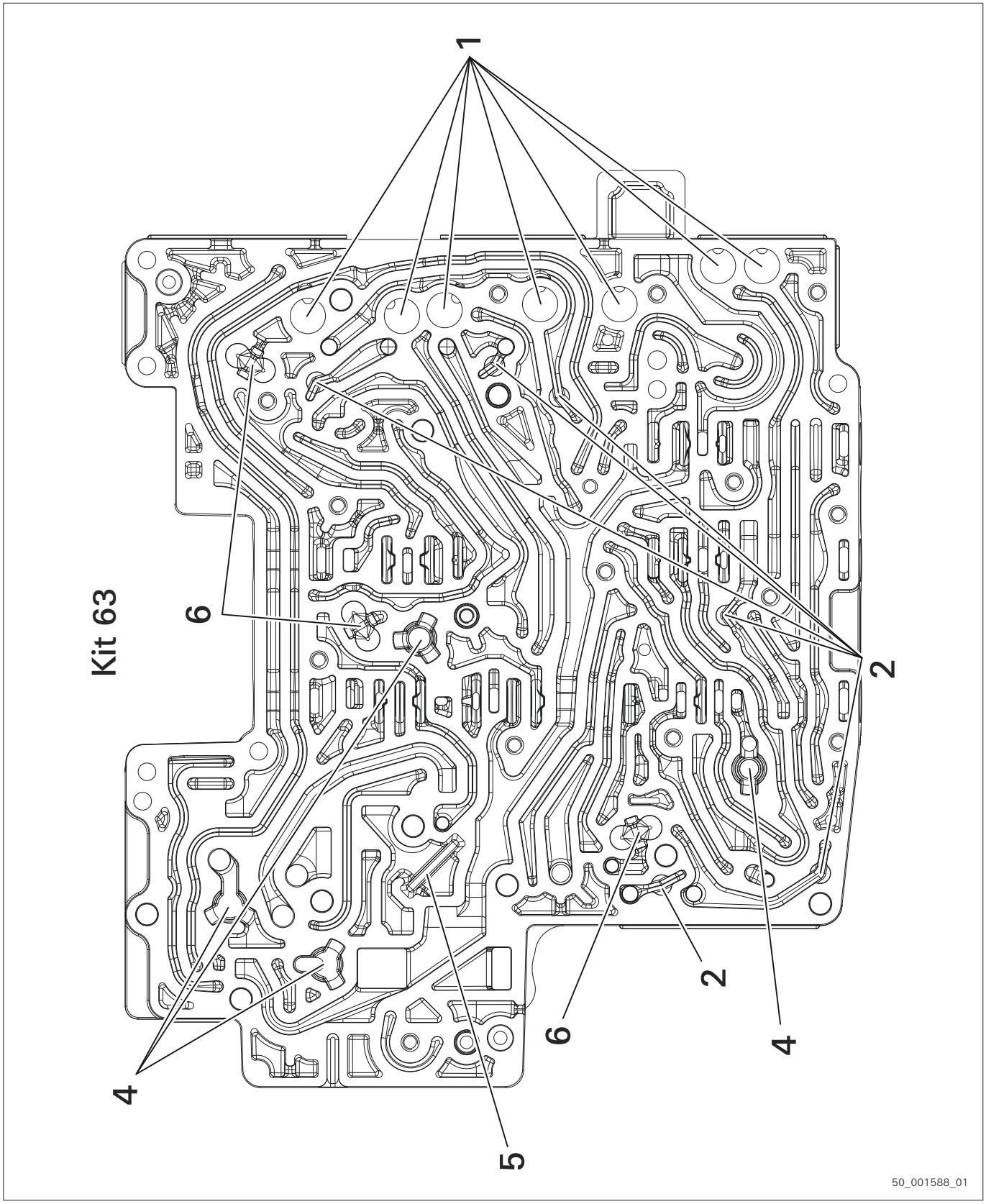

Fig. 56 1068.298.611

ZF Friedrichshafen AG
ZF Aftermarket
Metzer Straße 160
66117 Saarbrücken

Technical support
Telefon/Phone: +49 681 920-0
www.zf.com/contact

© ZF Friedrichshafen AG

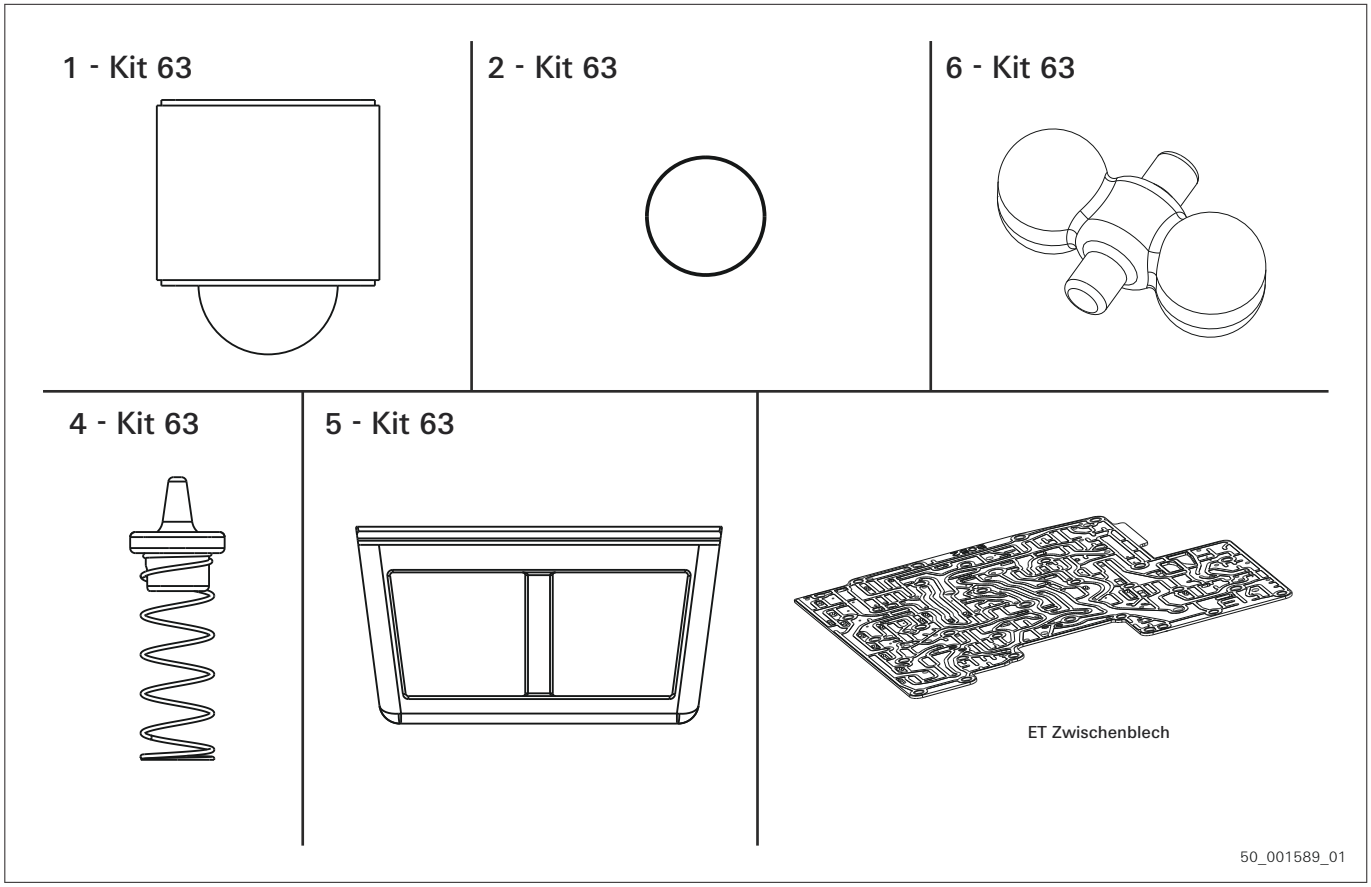

Fig. 57 1068.298.611

© ZF Friedrichshafen AG

6 Tightening Specifications

Screw the screws in by hand until firmly home. Then tighten the screws to torque considering the depicted numbers 1...n in ascending order.

6.1 1068.700.123 - Mechatronic (shift by cable) 6HP19 | 6HP26 | 6HP32

Tightening torque: **6 Nm (±0.6 Nm)**

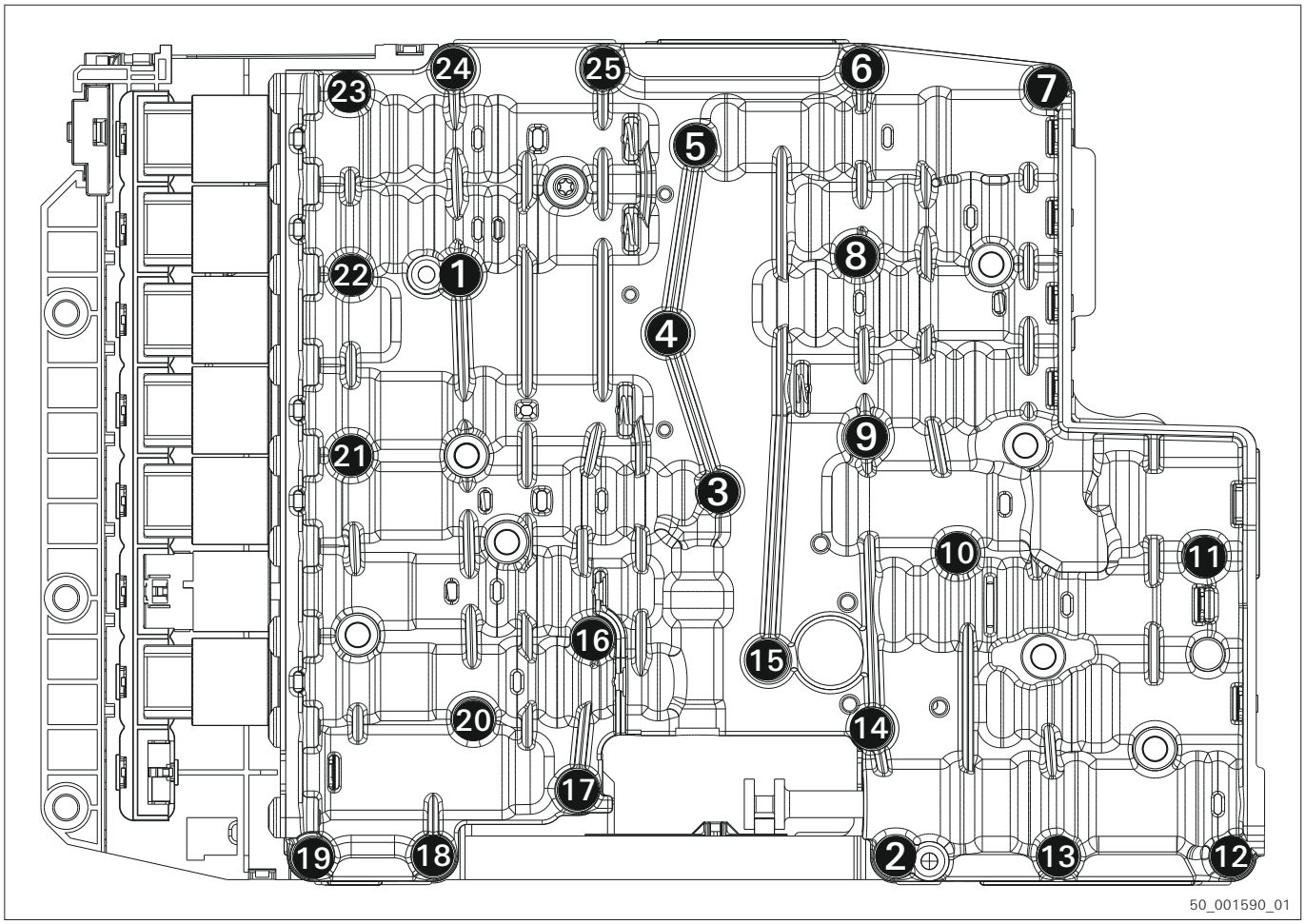

Fig. 58 1068.700.123

© ZF Friedrichshafen AG

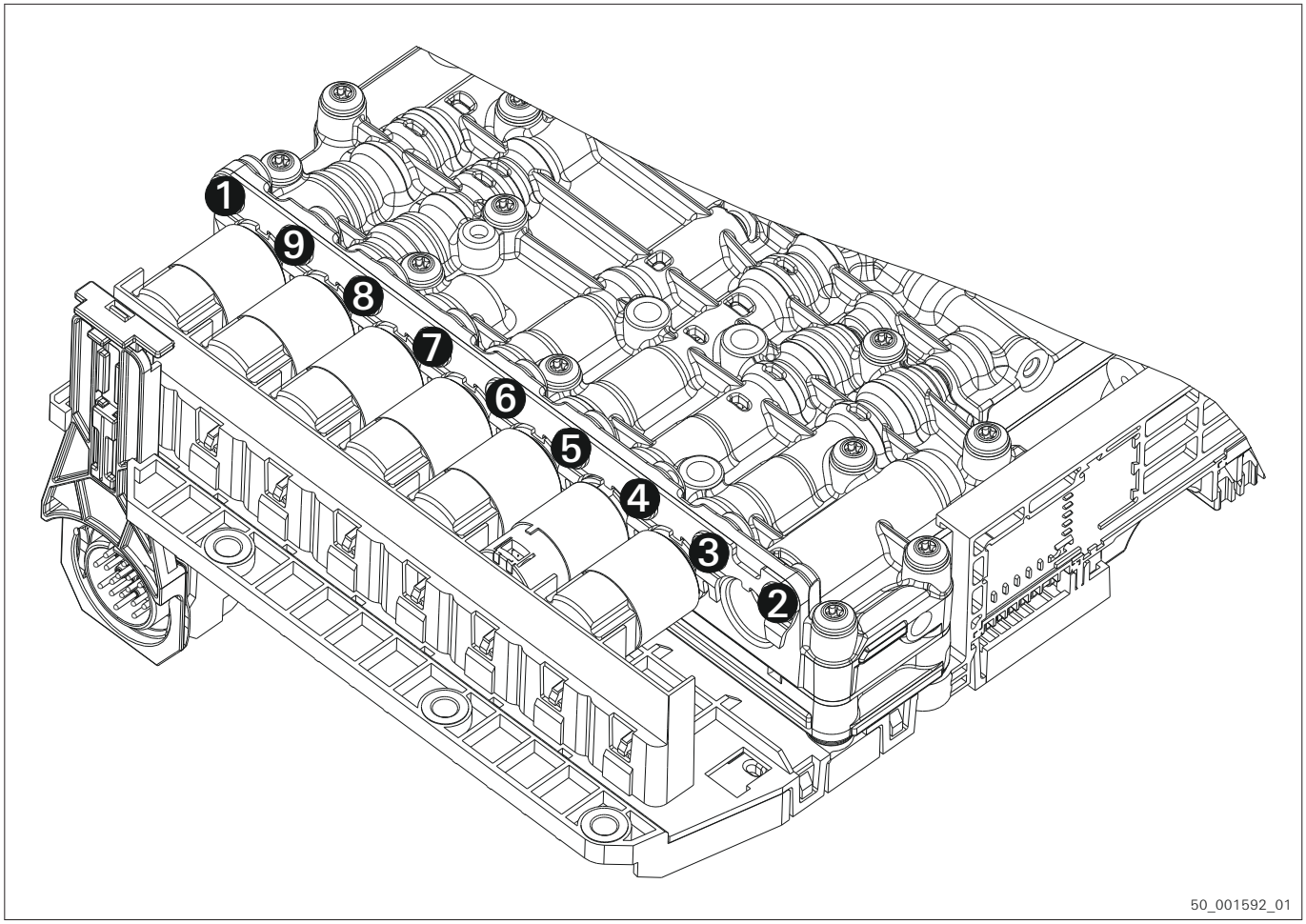

Fig. 59 1068.700.123

© ZF Friedrichshafen AG

6.2 1068.700.123 - Mechatronic (shift by wire) 6HP19 | 6HP26 | 6HP32

Tightening torque: **6 Nm (±0.6 Nm)**

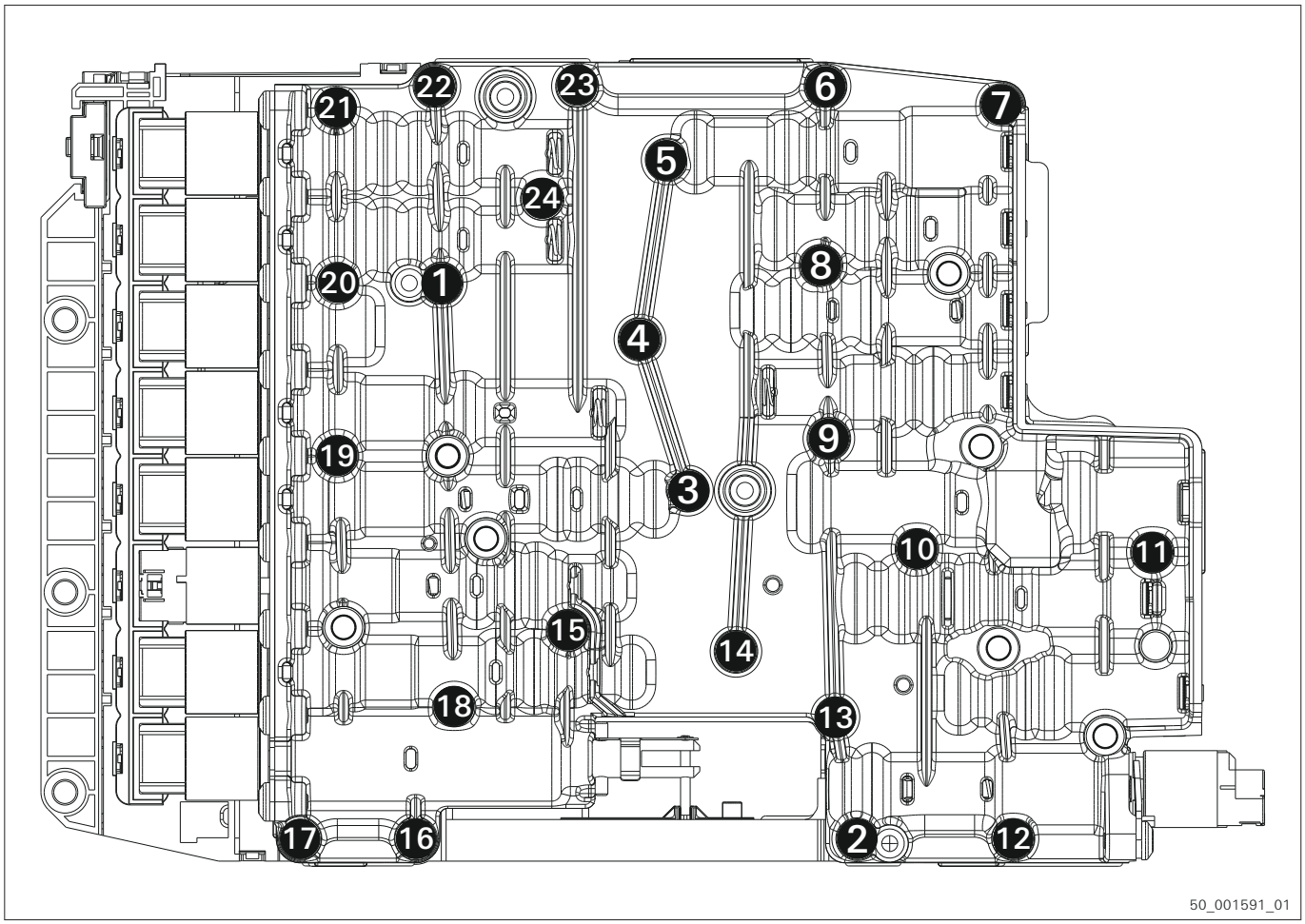

Fig. 60 1068.700.123

© ZF Friedrichshafen AG

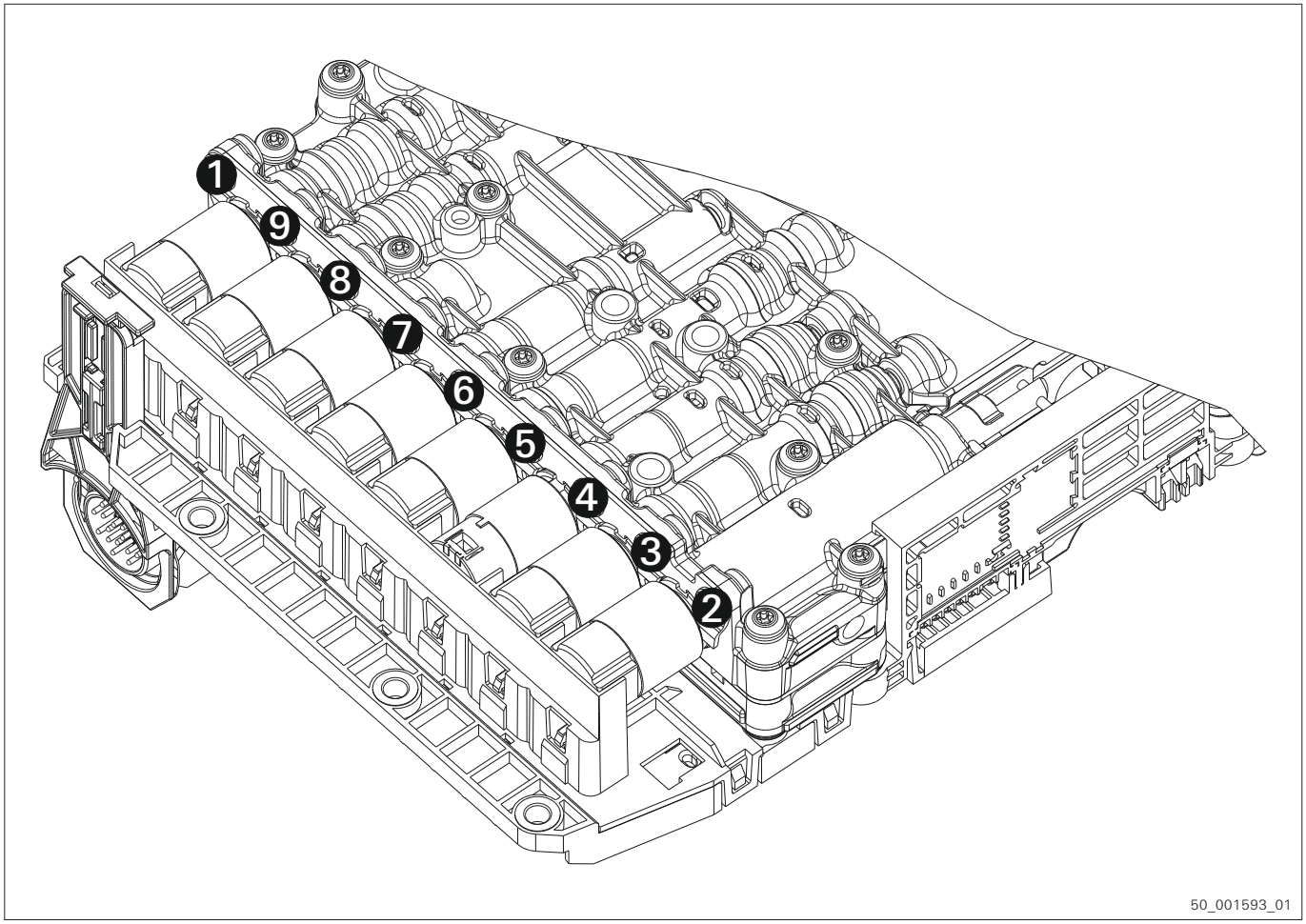

Fig. 61 1068.700.123

© ZF Friedrichshafen AG

6.3 1068.700.239 - Mechatronic (shift by cable) 6HP21 | 6HP28

Tightening torque: **6 Nm (±0.6 Nm)**

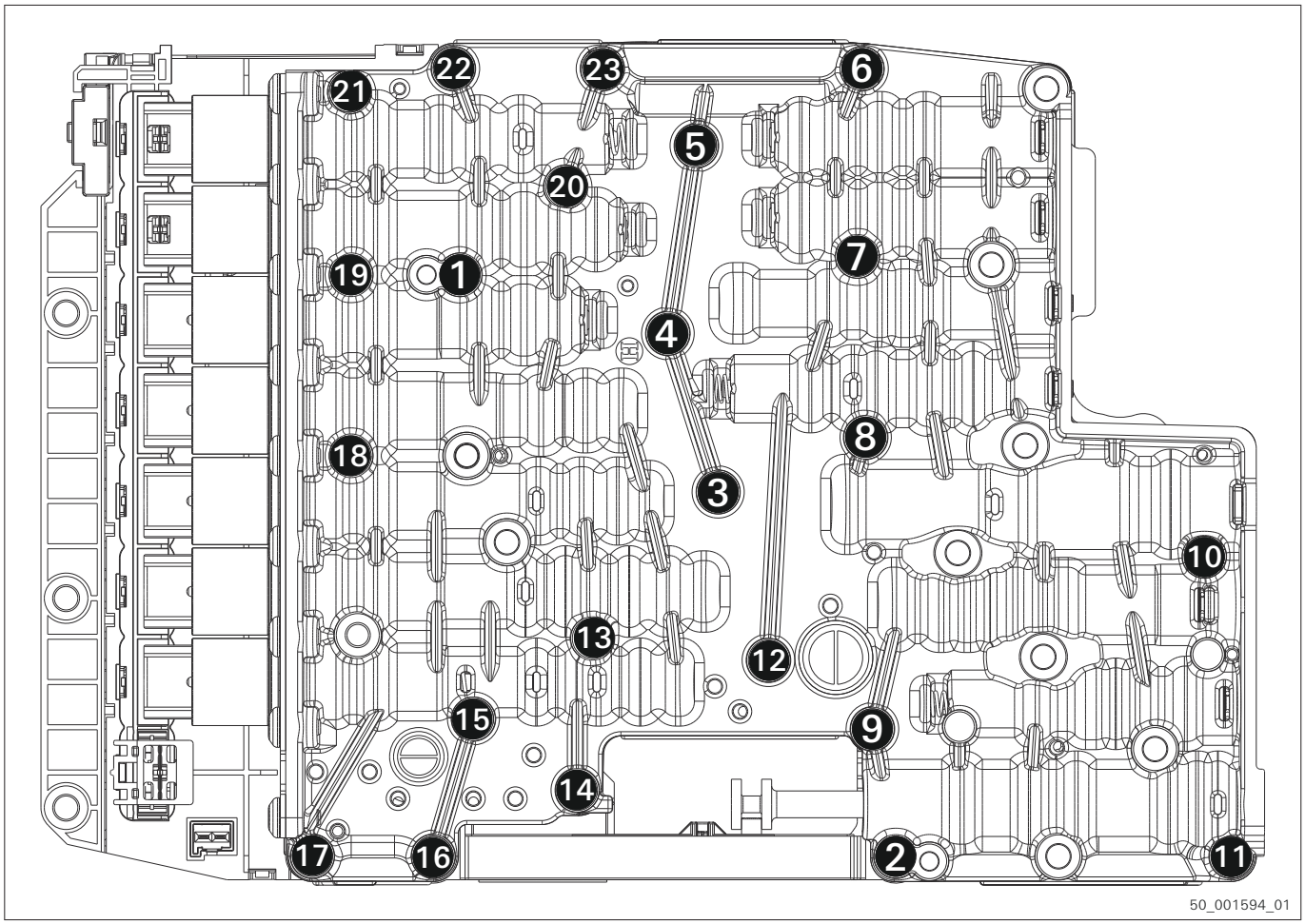

Fig. 62 1068.700.239

© ZF Friedrichshafen AG

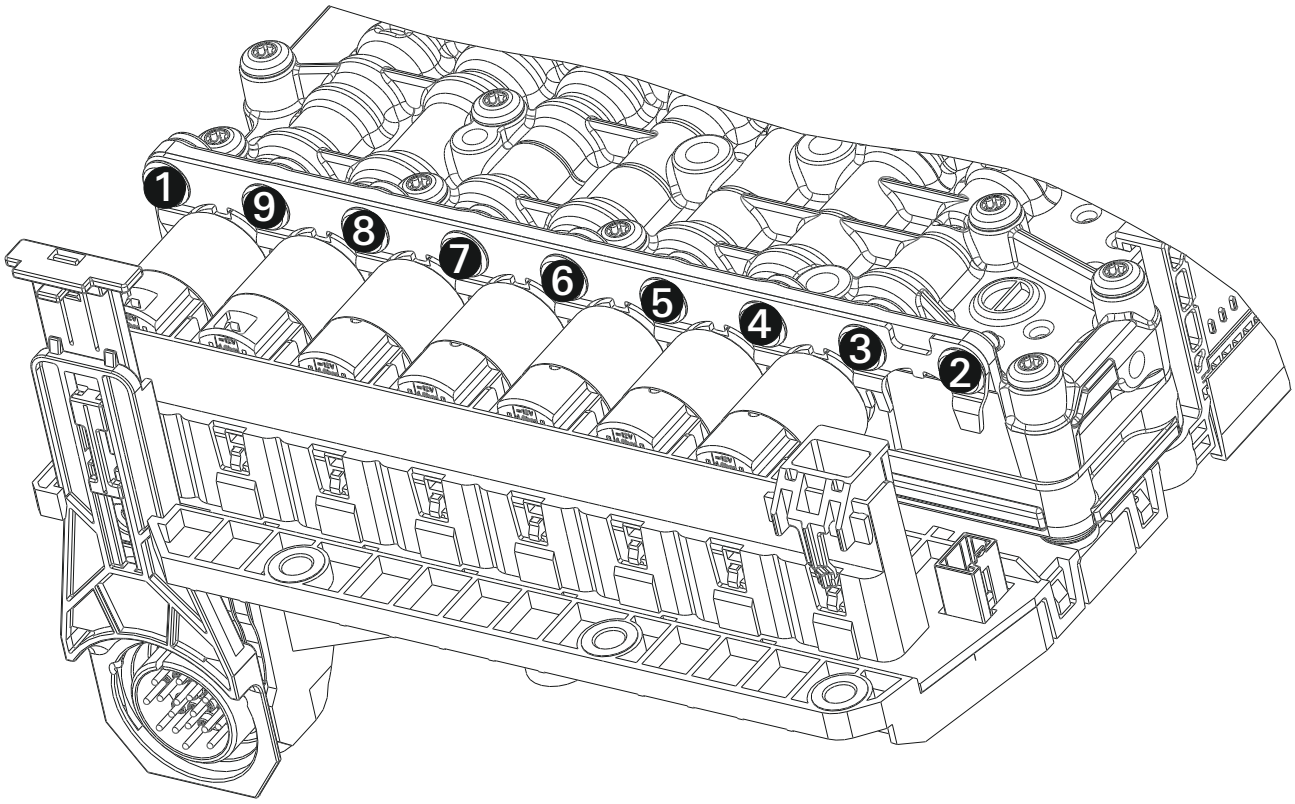

Fig. 63 1068.700.239

© ZF Friedrichshafen AG

6.4 1068.700.239 - Mechatronic (shift by wire) 6HP21 | 6HP28

Tightening torque: **6 Nm (±0.6 Nm)**

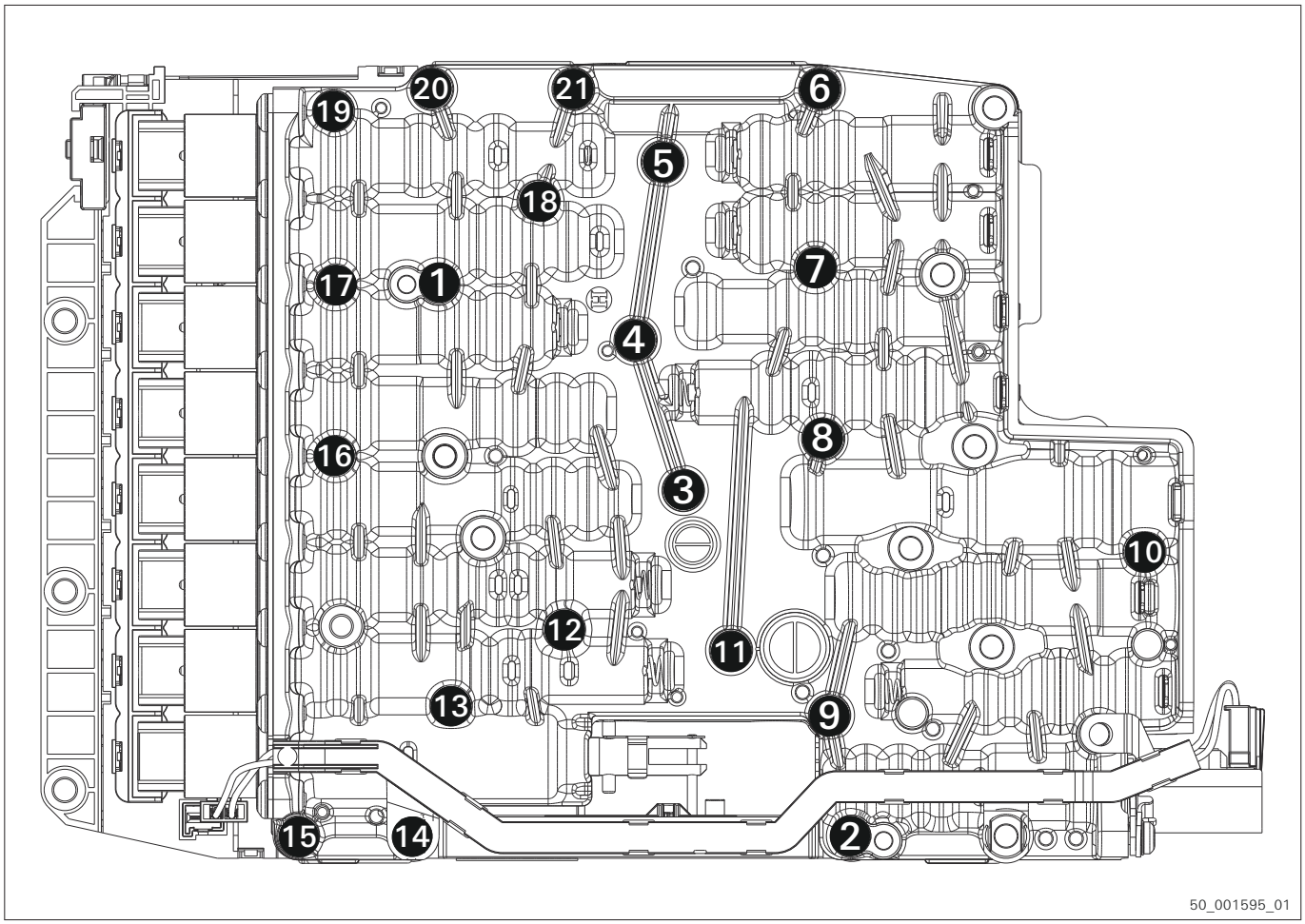

Fig. 64 1068.700.239

ZF Friedrichshafen AG
ZF Aftermarket
Metzer Straße 160
66117 Saarbrücken

Technical support
Telefon/Phone: +49 681 920-0
www.zf.com/contact

© ZF Friedrichshafen AG

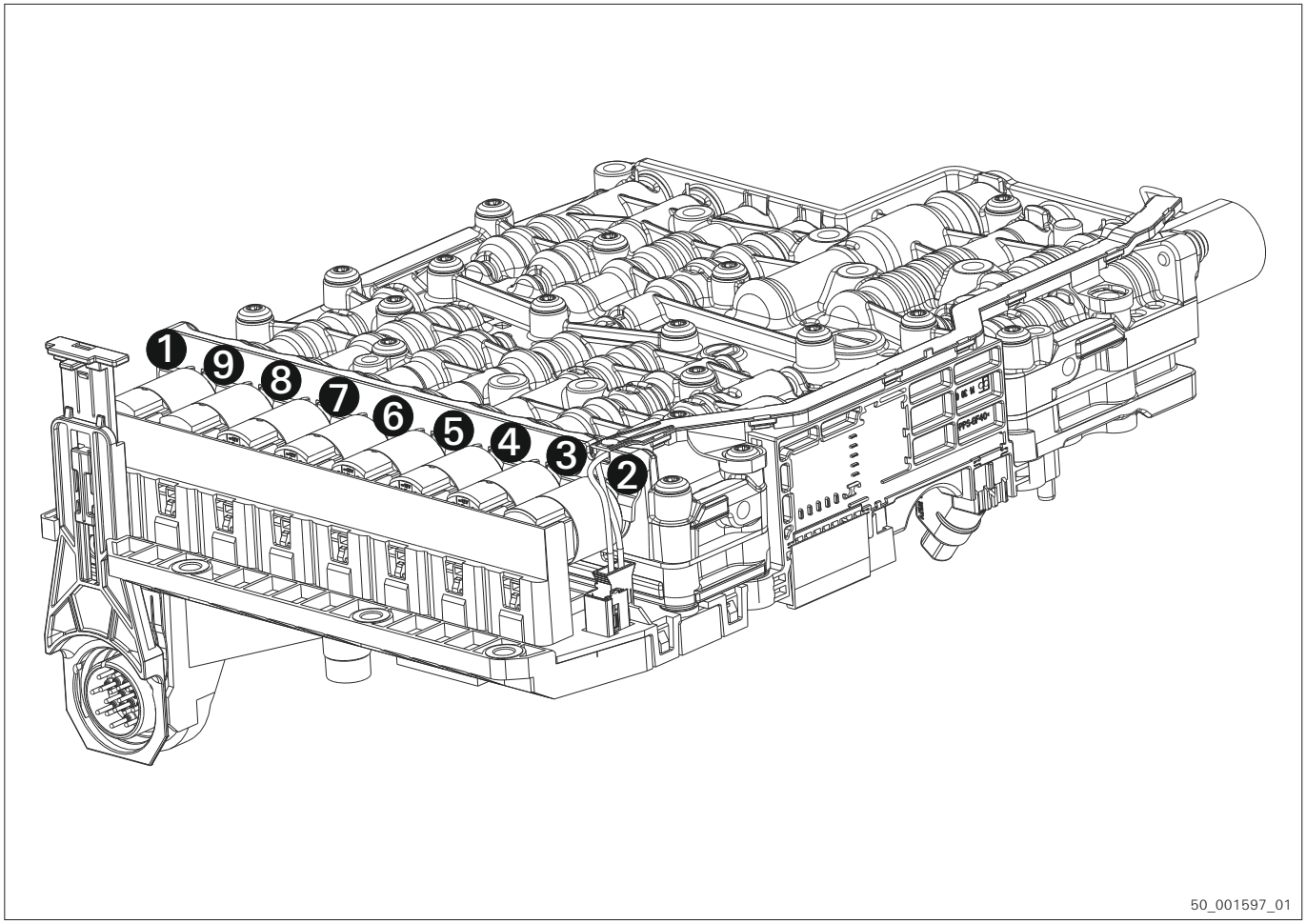

Fig. 65 1068.700.239

ZF Friedrichshafen AG
ZF Aftermarket
Metzer Straße 160
66117 Saarbrücken

Technical support
Telefon/Phone: +49 681 920-0
www.zf.com/contact

© ZF Friedrichshafen AG