Service Information
DMF with driveplate
Remove transmission

Audi A4 / A5 / A6 / Q5 / ...

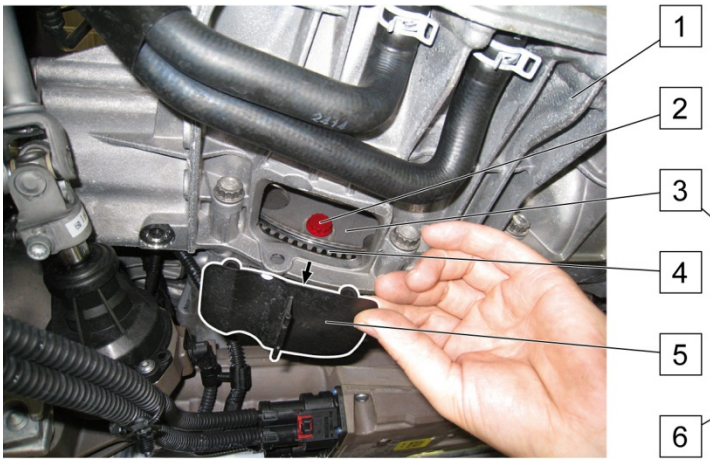

Fig. 1: Remove cover (5)

Fig. 2: Clutch, DMF (7) and input shaft (6)

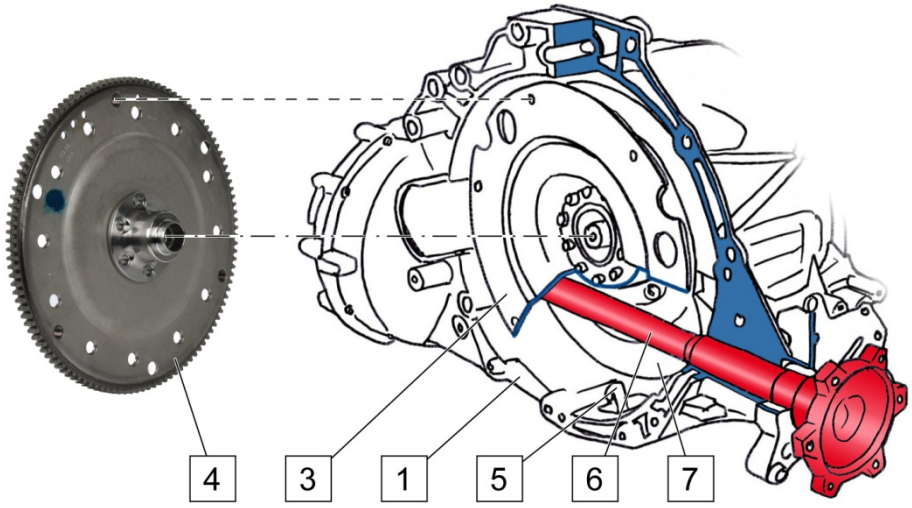

Fig. 3: Unscrew driveplate (3)

1	Transmission	5	Cover
2	DMF fixing screws	6	Input shaft
3	Driveplate	7	DMF - dual mass flywheel
4	Flexplate		

The input shaft (6) runs between the driveplate (3) and the DMF (7). The driveplate (3) and the DMF (7) are firmly connected to each other.

NOTICE

A flexplate (4) damaged during removal wobbles, causing noises and vibration. This may result in premature failure of the DMF.

⇨ Before disassembling the transmission (1), unscrew the DMF fixing screws (2) on the driveplate (3) and remove them.

⇨ Follow the vehicle manufacturer's installation instructions.

ZF Friedrichshafen AG ▪ ZF Aftermarket
Obere Weiden 12, 97424 Schweinfurt, Germany
Technical Support Phone: +49 9721 4755555
Fax: +49 9721 4755556
www.aftermarket.zf.com/contact

© ZF Friedrichshafen AG

Printed in Germany
12141 EN
03.2018

Assembly tool



Fig 4: Assembly tool

1 Assembly tool for radial stabilization of the clutch module. Apply the tool before installation in order to secure the module's position.

2 Assembly tool for axial stabilization of the clutch module. Apply the tool before installation in order to prevent tipping and axial shifting.

3 Assembly handle

When dealing with vehicles with DBC transmissions (differential before clutch), the clutch module must be accurately positioned prior to the installation of the transmission in order to prevent problems during installation and operation. The positioning can only be executed with a special assembly tool.

Observe the vehicle manufacturer specifications.

Detailed installation instructions can also be found at ZF [pro] Tech (www.protech.zf.com).

ZF Friedrichshafen AG ▪ ZF Aftermarket
Obere Weiden 12, 97424 Schweinfurt, Germany
Technical Support Phone: +49 9721 4755555
Fax: +49 9721 4755556
www.aftermarket.zf.com/contact

© ZF Friedrichshafen AG

Printed in Germany
12141 EN
03.2018